3.7V Lithium Polymer Battery Data Sheet

Model: 304380

Please Find More:

https://www.fpbattery.com/3-7v-1100mah-lithium-polymer-battery/

File Number: A/FP4380-17615

File Version: 01

CONTACT

CUSTOMER SERVICE
86.755.3682.7358
sales@fpbattery.com
Hours of Operation:
9:00am-6:00pm CST, Monday to Friday

LEARN MORE ON:
https://www.fpbattery.com/

DNK POWER COMPANY LIMITED

BATTERY SPECIFICATION

Part Number	DNK 304380
Nominal Voltage	3.7 V
Nominal Capacity	1180 mAh
Internal Impedence	<60mΩ
Charge Voltage	4.2V
Recommended Charge Current	0.2 C
Allowed Max Charge Current	0.5 C
Output Voltage Range	4.2 - 2.5 V
Recommended Discharge Current	0.2 C
Max Continuous Discharge Current	1 C
Pulse Discharge Current	3 C (10 mS)
Discharge Cut-off Voltage	2.5± 0.05V
Cycle Life to 80% Health	500 (0.2C, 25°C)

1

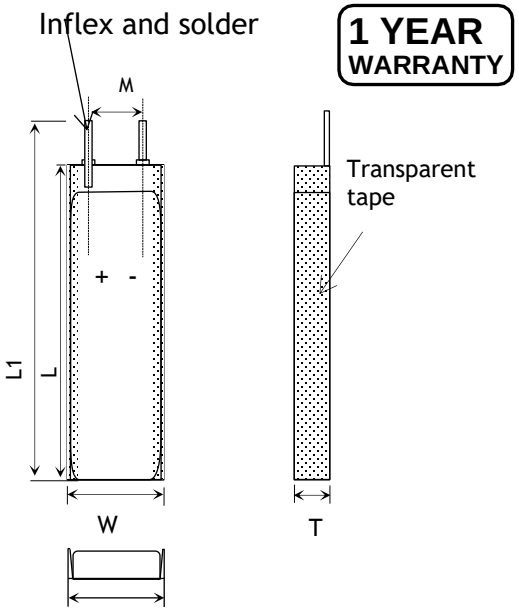

Item	Parameter (mm)
T	3
W	43
M	10
L	80
L_1	82
BL	82 ± 1
CL	100

ENVIRONMENTAL SPECIFICATIONS

Charging Temperature Range	0 - 45°C
Discharging Temperature Range	-20 - 60°C
Storage Period 1 Week	-20 - 45°C
Storage Period 1 Month	-10 - 45°C
Storage Period 6 Months	0 - 35°C

BATTERY PROTECTION

Over Charge	4.275 ± 50mV
Over Discharge	2.5V ± 50mV
Over Current	3A to 5A
Short Circuit	Yes

MECHANICAL SPECIFICATIONS

Dimensions	82x 43 x 3 mm(L*W*T)
Weight	19 g
Battery Terminals	WC/ FL *

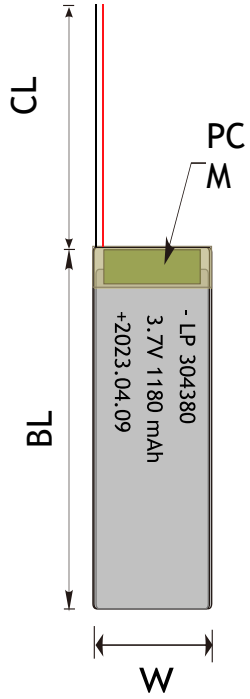

CERTIFICATION

Certification Approval	PLEASE CONSULT SALES

* WC=With Connector FL=Flying Leads UWP=Blue Wrapped PVC
BWP=Black Wrapped PVC BC= Bare Cell

RELATIVE CURVES

Discharge Characteriestics Curve in Different Rate@25℃

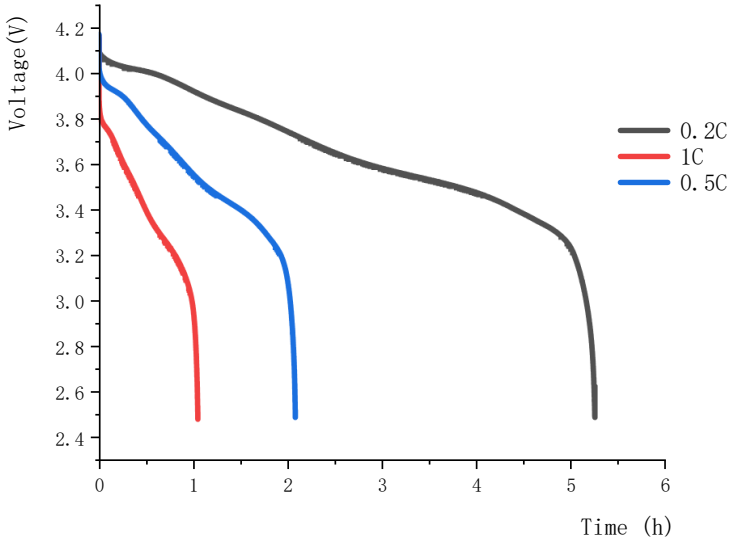

Charge & Discharge Characteriestics in different Rate@25℃

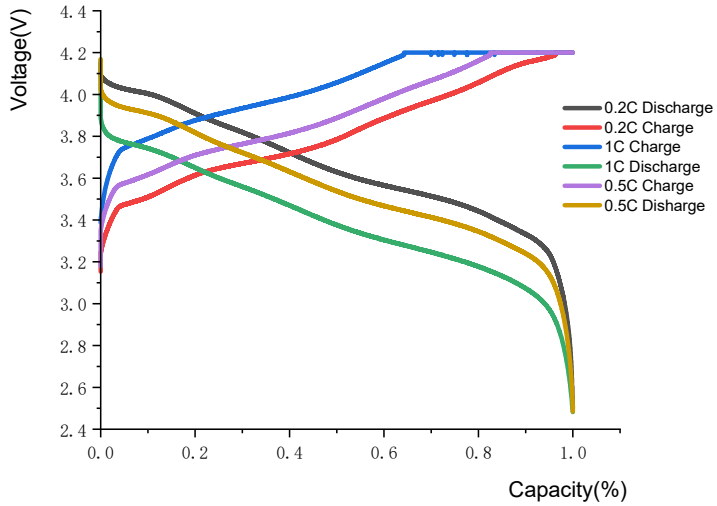

ANNOUNCEMENT

- If the battery swells during charging, stop charging immediately and disconnect the battery from the charger. Leave the battery outside for a few hours and observe. Then recycle the battery according to the instructions of your country/region.
- Do not throw the battery in a fire.
- Make sure the device is turned off before disconnecting the power.
- Store behind a fire door and where a fire alarm is situated.
- Never incinerate nor dispose of the cells in a fire. These may cause firing of the cells, which is very dangerous and is prohibited.
- Avoid storing the battery in a hot environment.
- Store in fire protected, separate areas.
- Never use a charger that is NOT specifically designed to charge Lithium Polymer cells.
- Check the voltage of your LiPo pack before charging with a digital multimeter. Only charge if it is 3.30V or greater per cell (e.g. 9.90V for a 3S pack).
- Make sure the battery is fully charged before use.
- Store in a temperature protected area between 10 and 25 degrees Centigrade