3.7V Lithium Polymer Battery Data Sheet

Model: 304266

Please Find More:

https://www.fpbattery.com/3-7v-800mah-lithium-polymer-battery/

File Number: A/FP4266-13484

File Version: 01

CONTACT

CUSTOMER SERVICE
86.755.3682.7358
sales@fpbattery.com
Hours of Operation:
9:00am-6:00pm CST, Monday to Friday

LEARN MORE ON:
https://www.fpbattery.com/

DNK POWER COMPANY LIMITED

BATTERY SPECIFICATION

Part Number	DNK 304266
Nominal Voltage	3.7 V
Nominal Capacity	830 mAh
Internal Impedence	<60mΩ
Charge Voltage	4.2V
Recommended Charge Current	0.2 C
Allowed Max Charge Current	0.5 C
Output Voltage Range	4.2 - 2.5 V
Recommended Discharge Current	0.2 C
Max Continuous Discharge Current	1 C
Pulse Discharge Current	3 C (10 mS)
Discharge Cut-off Voltage	2.5± 0.05V
Cycle Life to 80% Health	500 (0.2C, 25°C)

1

1 YEAR WARRANTY

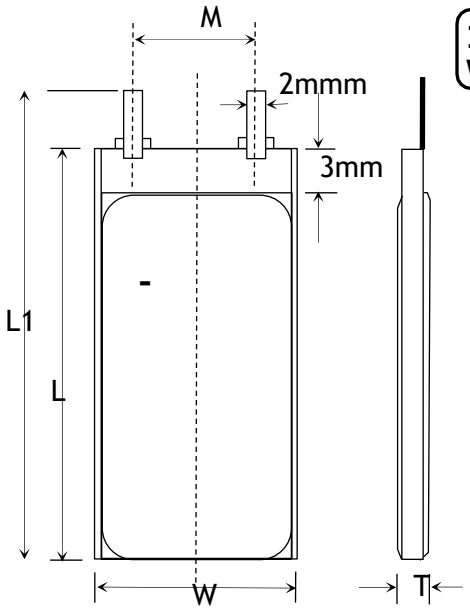

Item	Parameter (mm)
T	3
W	42
M	10
L	66
L_1	68
BL	68 ± 1
CL	100

ENVIRONMENTAL SPECIFICATIONS

Charging Temperature Range	0 - 45°C
Discharging Temperature Range	-20 - 60°C
Storage Period 1 Week	-20 - 45°C
Storage Period 1 Month	-10 - 45°C
Storage Period 6 Months	0 - 35°C

BATTERY PROTECTION

Over Charge	4.275 ± 50mV
Over Discharge	2.5V ± 50mV
Over Current	3A to 5A
Short Circuit	Yes

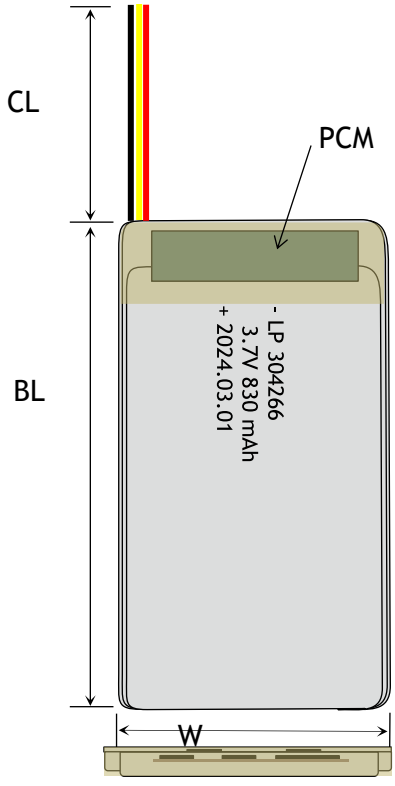

MECHANICAL SPECIFICATIONS

Dimensions	68x 42 x 3 mm(L*W*T)
Weight	Around 13 g
Battery Terminals	WC/ FL *

CERTIFICATION

Certification Approval	PLEASE CONSULT SALES

* WC=With Connector FL=Flying Leads UWP=Blue Wrapped PVC BWP=Black Wrapped PVC BC= Bare Cell

RELATIVE CURVES

Constant Current Charge Characteristics---1.7A

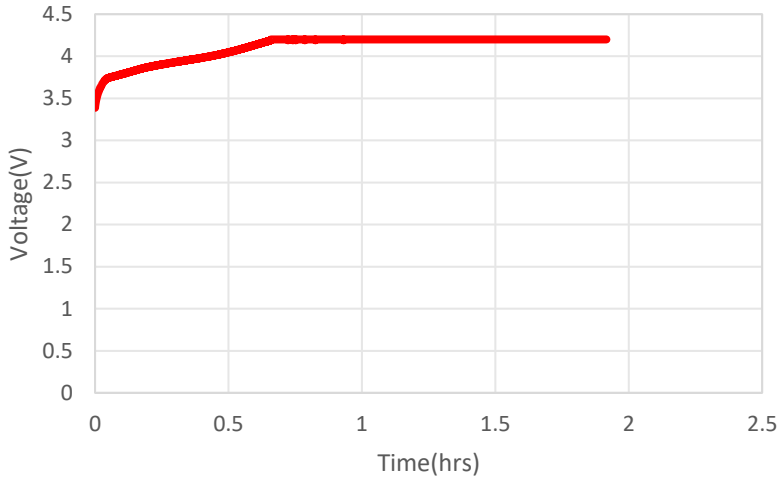

Discharge Characteristics

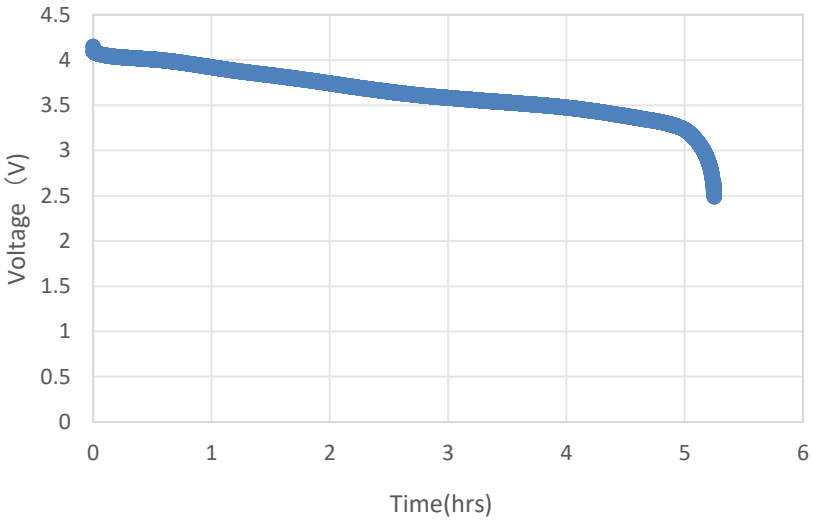

ANNOUNCEMENT

- Do not charge any pack containing one or more damaged or swollen/puffed cell as there is a high risk of a fire. Dispose of them.
- All batteries should be stored, charged and used in accordance with the manufacturer's instructions.
- Protect from the frost, and also temperatures above 60 degrees Centigrade. Batteries should never be in the sun, on hot surfaces.
- ALWAYS consider using a "Lipo Guard" or a similar protective pouch while charging LiIon and LiPo batteries (this type of pouch will contain a small fire should the battery bulge or personal laptop computers by individuals.) experience a thermal runaway event, protecting nearby items against ignition. *Note: this recommendation is not intended to apply to routine charging and use of
- Observe the polarities (Negative and Positive). Do not connect them wrongly.
- Store dust free and dry and protect from moisture
- Do not puncture the cells as this could cause a fire.
- Do not charge Lipo batteries inside a car. Do not charge Lipo batteries inside a RC model.
- Never leave a battery unattended while charging. During the entire process of charging your LiPo battery, you must constantly observe and monitor the charging process so that you can quickly react to any problems that may occur and to be certain that the battery is being charged properly.
- Test equipment for short circuits prior to installing batteries.
- Slow down the charging and discharging rate of the battery in low temperature environment.