# 3.7V Lithium Polymer Battery Data Sheet

Model: 304066

Please Find More:

https://www.fpbattery.com/3-7v-900mah-lithium-polymer-battery/

File Number: A/FP4066-14759

File Version: 01


CONTACT

CUSTOMER SERVICE
86.755.3682.7358
sales@fpbattery.com
Hours of Operation:
9:00am-6:00pm CST, Monday to Friday

LEARN MORE ON:
https://www.fpbattery.com/

DNK POWER COMPANY LIMITED

## BATTERY SPECIFICATION

| | |
|---|---|
| Part Number | DNK 304066 |
| Nominal Voltage | 3.7 V |
| Nominal Capacity | 980 mAh |
| Internal Impedence | <60mΩ |
| Charge Voltage | 4.2V |
| Recommended Charge Current | 0.2 C |
| Allowed Max Charge Current | 0.5 C |
| Output Voltage Range | 4.2 – 2.5 V |
| Recommended Discharge Current | 0.2 C |
| Max Continuous Discharge Current | 1 C |
| Pulse Discharge Current | 3 C (10 mS) |
| Discharge Cut-off Voltage | 2.5± 0.05V |
| Cycle Life to 80% Health | 500 (0.2C, 25°C) |

1

**1 YEAR WARRANTY**

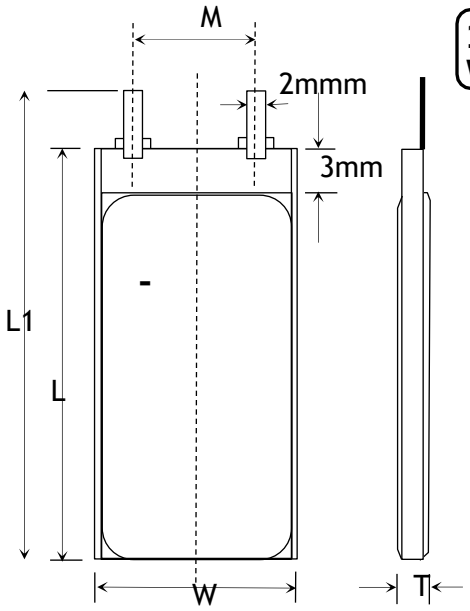


| Item | Parameter (mm) |
|---|---|
| T | 3 |
| W | 40 |
| M | 10 |
| L | 66 |
| $L_1$ | 68 |
| BL | 68 ± 1 |
| CL | 100 |

## ENVIRONMENTAL SPECIFICATIONS

| | |
|---|---|
| Charging Temperature Range | 0 – 45°C |
| Discharging Temperature Range | -20 – 60°C |
| Storage Period 1 Week | -20 – 45°C |
| Storage Period 1 Month | -10 – 45°C |
| Storage Period 6 Months | 0 – 35°C |

## BATTERY PROTECTION

| | |
|---|---|
| Over Charge | 4.275 ± 50mV |
| Over Discharge | 2.5V ± 50mV |
| Over Current | 3A to 5A |
| Short Circuit | Yes |

## MECHANICAL SPECIFICATIONS

| | |
|---|---|
| Dimensions | 68x 40 x 3 mm(L*W*T) |
| Weight | Around 16 g |
| Battery Terminals | WC/ FL * |

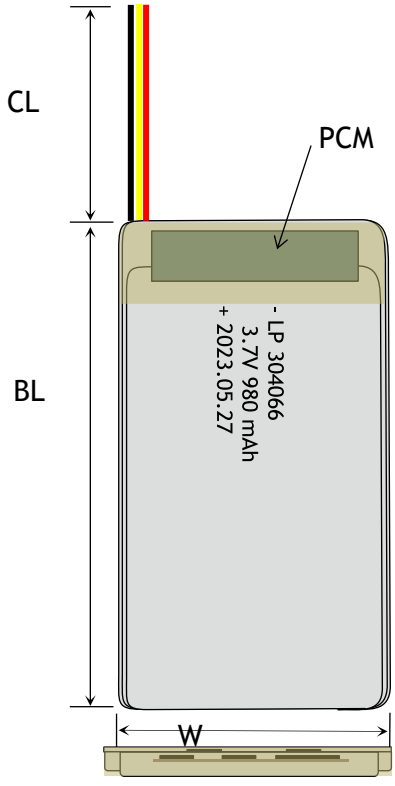


## CERTIFICATION

| | |
|---|---|
| Certification Approval | PLEASE CONSULT SALES |

* WC=With Connector FL=Flying Leads UWP=Blue Wrapped PVC
BWP=Black Wrapped PVC BC= Bare Cell

# RELATIVE CURVES

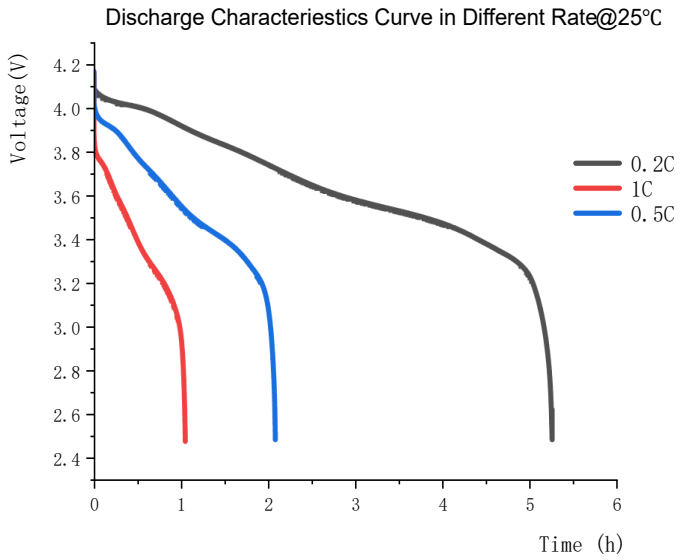


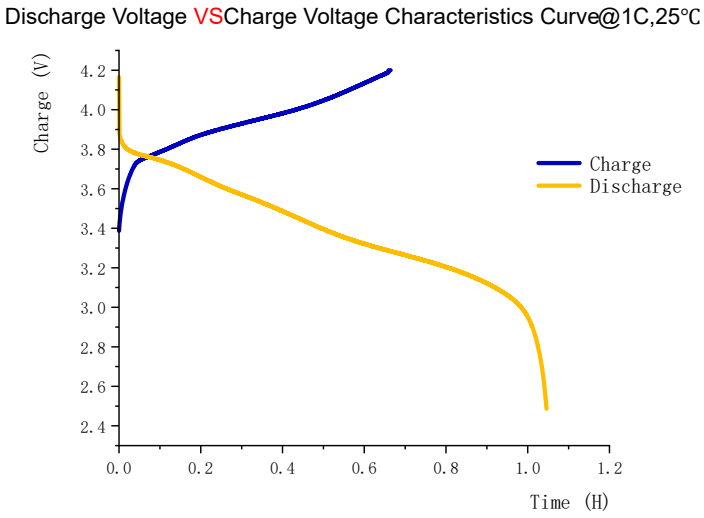


# ANNOUNCEMENT

- NEVER use water to try and extinguish a LiPo fire. Water acts like petrol on a LiPo battery fire.
- Batteries should not be carried in pockets as coins, keys and similar metal items can cause shorting leading to overheating, burns or ignition.
- ALWAYS tape over the terminals/contacts of each battery (a fire can start if battery terminals come into contact with each other or other metallic items in the area).
- Obtain sand. Use in bottom of isolation containers and as a smothering agent in case of fire.
- Do not apply excessive mechanical stress to the battery.
- Avoid using chargers with long charging times.
- Do not overcharge the battery and observe the charger and battery charge time instructions.
- Avoid storing the battery in a hot environment.
- AVOID storing Li-ion batteries with metal objects, including in a drawer with coins.
- Intact batteries can be disposed of as Universal Waste. If the battery is greater than 9V, tape the terminals before disposal.
- Intact batteries can be disposed of as Universal Waste. If the battery is greater than 9V, tape the terminals before disposal.