3.7V Lithium Polymer Battery Data Sheet

Model: 303970

Please Find More:

https://www.fpbattery.com/3-7v-800mah-lithium-polymer-battery/

File Number: A/FP3970-16802

File Version: 01

CONTACT

CUSTOMER SERVICE
86.755.3682.7358
sales@fpbattery.com
Hours of Operation:
9:00am-6:00pm CST, Monday to Friday

LEARN MORE ON:
https://www.fpbattery.com/

DNK POWER COMPANY LIMITED

BATTERY SPECIFICATION

Part Number	DNK 303970
Nominal Voltage	3.7 V
Nominal Capacity	820 mAh
Internal Impedence	<60mΩ
Charge Voltage	4.2V
Recommended Charge Current	0.2 C
Allowed Max Charge Current	0.5 C
Output Voltage Range	4.2 - 2.5 V
Recommended Discharge Current	0.2 C
Max Continuous Discharge Current	1 C
Pulse Discharge Current	3 C (10 mS)
Discharge Cut-off Voltage	2.5± 0.05V
Cycle Life to 80% Health	500 (0.2C, 25°C)

1

1 YEAR WARRANTY

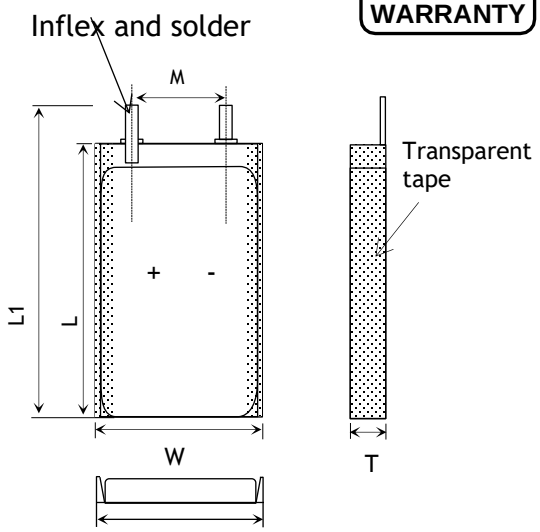

Item	Parameter (mm)
T	3
W	39
M	10
L	70
L_1	72
BL	72 ± 1
CL	100

ENVIRONMENTAL SPECIFICATIONS

Charging Temperature Range	0 - 45°C
Discharging Temperature Range	-20 - 60°C
Storage Period 1 Week	-20 - 45°C
Storage Period 1 Month	-10 - 45°C
Storage Period 6 Months	0 - 35°C

BATTERY PROTECTION

Over Charge	4.275 ± 50mV
Over Discharge	2.5V ± 50mV
Over Current	3A to 5A
Short Circuit	Yes

MECHANICAL SPECIFICATIONS

Dimensions	72x 39 x 3 mm(L*W*T)
Weight	13 g
Battery Terminals	WC/ FL *

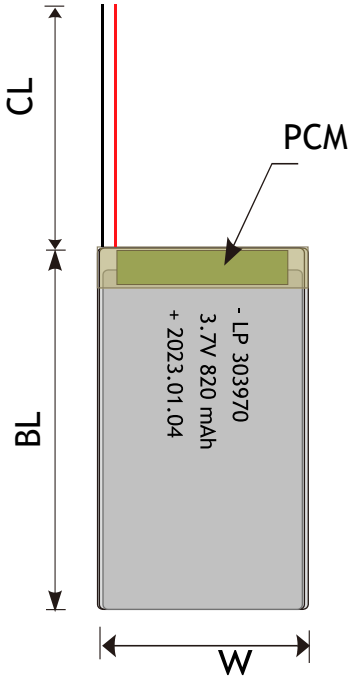

CERTIFICATION

Certification Approval	PLEASE CONSULT SALES

* WC=With Connector FL=Flying Leads UWP=Blue Wrapped PVC BWP=Black Wrapped PVC BC= Bare Cell

BULK PRODUCTION ACTUAL PICTURES



BARE CELL (BC)



FLYING LEADS (FL)



WITH CONNECTOR (WC)



BLUE WRAPPED PVC (UWP)



BLACK WRAPPED PVC (BWP)

3.7V LIPO BATTERY OPTIONS



Special Ingredients to make batteries work from -40 -85 ° C



Discharging Current up to 100C



Popular JST,Molex,Hirose,Anderson available



LED Power Indicator



Power Button



Upgrade to LifePo4 tech and life circle up to 1500

RELATIVE CURVES

Charge & Discharge Characteriestics in different Rate@25℃

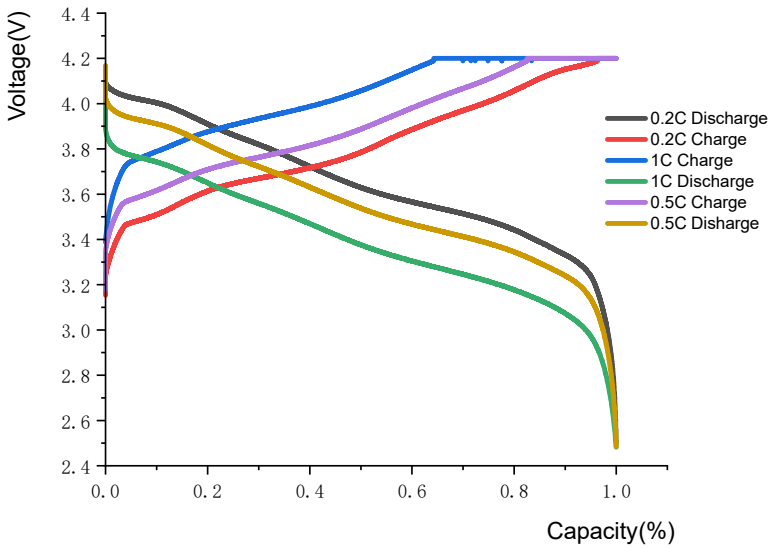

State of Charge Characteriestics @1C 25℃

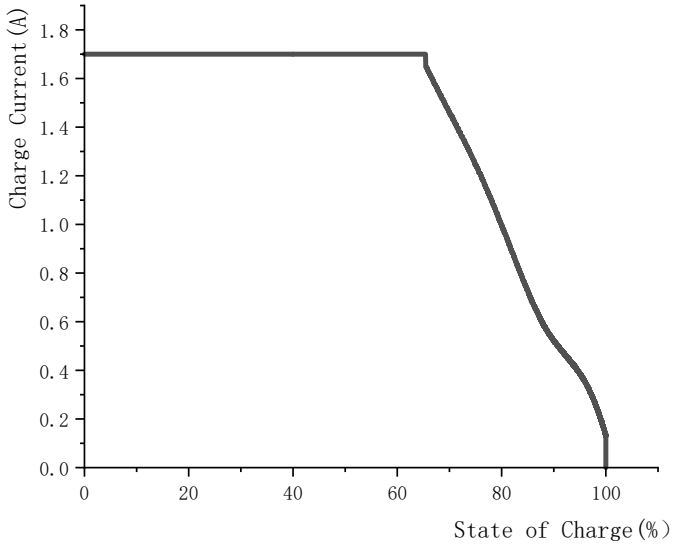

ANNOUNCEMENT

- Never expose Batteries to extreme temperatures or direct sunlight. The temperature range must be between 40-120° F (4-49° C).
- Charge on a non-flammable surface (concrete, ceramic, steel) away from any flammable material
- If you notice your LiPo battery pack is swelling while charging, stop the charging process immediately, put the battery in a safe non-flammable metal container and observe it.
- Do not leave Lipo batteries unattended while charging.
- The cells shall never be soaked with liquids such as water, seawater drinks such as soft drinks, juices coffee or others.
- When selecting the cell count or voltage for charging purposes, select the cell count and voltage as it appears on the battery label. As a safety precaution, please confirm that the information printed on the battery or label is correct. (Please refer to Chart 1). Selecting the wrong cell count or charging voltage may cause fire.
- LiPo batteries have very specific charging requirements. Some chargers, such as those used for toys or cellphones, are made to charge a specific cell count and are not configurable for other cell counts. The LiPo charger used must be able to handle the cell count of the battery you arecharging.
- Pay attention to the positive and negative connections of the battery to ensure proper connection.
- If charging indoors, only charge with a smoke detector above where you are charging.
- Regularly check the battery case for leaks or damage.
- Do not place batteries in closed containers.