3.7V Lithium Polymer Battery Data Sheet

Model: 303680

Please Find More:

https://www.fpbattery.com/3-7v-800mah-lithium-polymer-battery/

File Number: A/FP3680-20629

File Version: 01

CONTACT

CUSTOMER SERVICE
86.755.3682.7358
sales@fpbattery.com
Hours of Operation:
9:00am-6:00pm CST, Monday to Friday

LEARN MORE ON:
https://www.fpbattery.com/

DNK POWER COMPANY LIMITED

BATTERY SPECIFICATION

Part Number	DNK 303680
Nominal Voltage	3.7 V
Nominal Capacity	865 mAh
Internal Impedence	<60mΩ
Charge Voltage	4.2V
Recommended Charge Current	0.2 C
Allowed Max Charge Current	0.5 C
Output Voltage Range	4.2 - 2.5 V
Recommended Discharge Current	0.2 C
Max Continuous Discharge Current	1 C
Pulse Discharge Current	3 C (10 mS)
Discharge Cut-off Voltage	2.5± 0.05V
Cycle Life to 80% Health	500 (0.2C, 25°C)

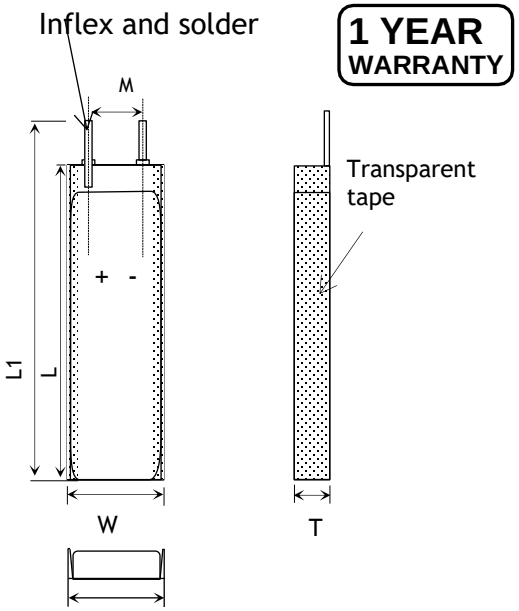

Item	Parameter (mm)
T	3
W	36
M	10
L	80
L_1	82
BL	82 ± 1
CL	100

ENVIRONMENTAL SPECIFICATIONS

Charging Temperature Range	0 - 45°C
Discharging Temperature Range	-20 - 60°C
Storage Period 1 Week	-20 - 45°C
Storage Period 1 Month	-10 - 45°C
Storage Period 6 Months	0 - 35°C

BATTERY PROTECTION

Over Charge	4.275 ± 50mV
Over Discharge	2.5V ± 50mV
Over Current	3A to 5A
Short Circuit	Yes

MECHANICAL SPECIFICATIONS

Dimensions	82x 36 x 3 mm(L*W*T)
Weight	14 g
Battery Terminals	WC/ FL *

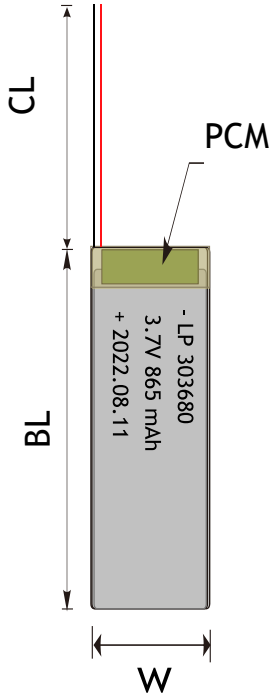

CERTIFICATION

Certification Approval	PLEASE CONSULT SALES

* WC=With Connector FL=Flying Leads UWP=Blue Wrapped PVC BWP=Black Wrapped PVC BC= Bare Cell

BULK PRODUCTION ACTUAL PICTURES



BARE CELL (BC)



FLYING LEADS (FL)



WITH CONNECTOR (WC)



BLUE WRAPPED PVC (UWP)



BLACK WRAPPED PVC (BWP)

3.7V LIPO BATTERY OPTIONS



Special Ingredients to make batteries work from -40 -85 ° C



Discharging Current up to 100C



Popular JST,Molex,Hirose,Anderson available



LED Power Indicator



Power Button



Upgrade to LifePo4 tech and life circle up to 1500

RELATIVE CURVES

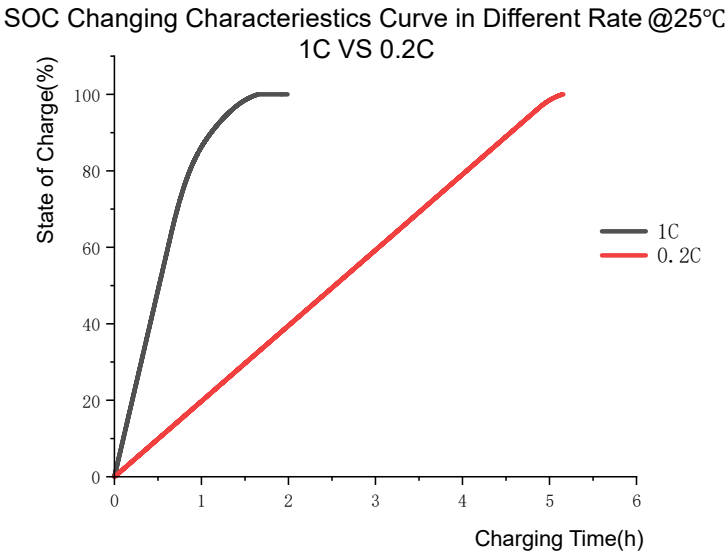

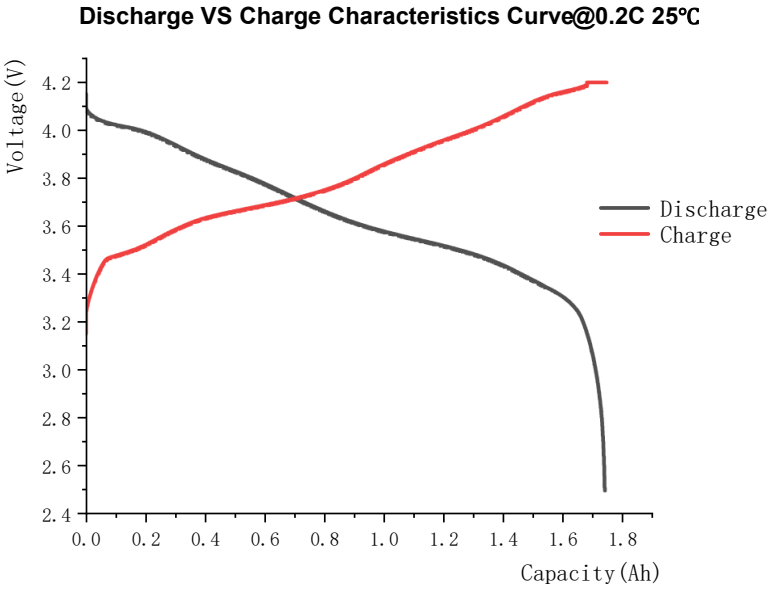

ANNOUNCEMENT

- ALWAYS consider using a “Lipo Guard” or a similar protective pouch while charging LiIon and LiPo batteries (this type of pouch will contain a small fire should the battery bulge or personal laptop computers by individuals.) experience a thermal runaway event, protecting nearby items against ignition. *Note: this recommendation is not intended to apply to routine charging and use of
- Avoid prolonged use of the device with a low battery.
- Before starting work, if applicable, understand one-hand working techniques.
- Do not expose the battery to high temperatures to avoid overheating.
- During discharging and handling the batteries, do not exceed 160°F (71°C). Otherwise, the battery may be damaged and a fire may result.
- Store lithium batteries in a dedicated, vented fire-rated cabinet. Keep combustible materials clear of the cabinet. Label cabinet as containing lithium batteries.
- Test equipment for short circuits prior to installing batteries.
- Read the Product Specification and respect the maximum voltage (4.2V/cell). Never charge higher than 4.25V, which is the maximum voltage. Charging with a higher voltage will irreparably damage the battery and may lead to the start of a fire.
- Charge on non-conductive, non-combustible surfaces.
- ALWAYS locate exits and evacuation routes in your area. Know the location of portable fire extinguishers in the area, and the location of the nearest fire alarm pull station (if the building is equipped with a fire alarm system).
- Avoid excessively hot and humid conditions, especially when batteries are fully charged. Do not place batteries in direct sunlight, on hot surfaces or in

hot locations.