3.7V Lithium Polymer Battery Data Sheet

Model: 303578

Please Find More:

https://www.fpbattery.com/3-7v-800mah-lithium-polymer-battery/

File Number: A/FP3578-20694

File Version: 01

CONTACT

CUSTOMER SERVICE
86.755.3682.7358
sales@fpbattery.com
Hours of Operation:
9:00am-6:00pm CST, Monday to Friday

LEARN MORE ON:
https://www.fpbattery.com/

DNK POWER COMPANY LIMITED

BATTERY SPECIFICATION

Part Number	DNK 303578
Nominal Voltage	3.7 V
Nominal Capacity	820 mAh
Internal Impedence	<60mΩ
Charge Voltage	4.2V
Recommended Charge Current	0.2 C
Allowed Max Charge Current	0.5 C
Output Voltage Range	4.2 - 2.5 V
Recommended Discharge Current	0.2 C
Max Continuous Discharge Current	1 C
Pulse Discharge Current	3 C (10 mS)
Discharge Cut-off Voltage	2.5± 0.05V
Cycle Life to 80% Health	500 (0.2C, 25°C)

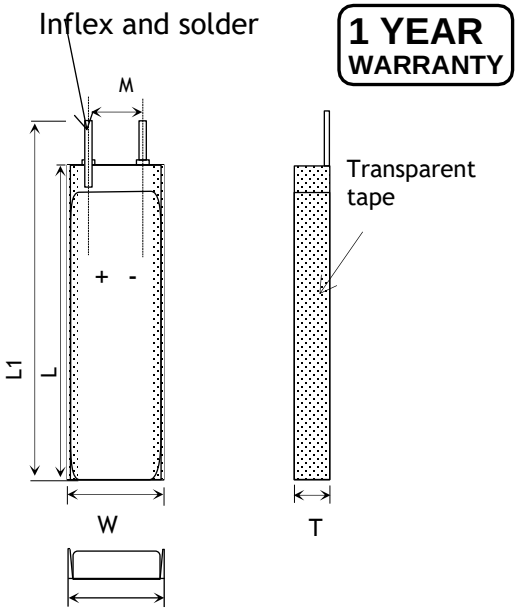

Item	Parameter (mm)
T	3
W	35
M	10
L	78
L_1	80
BL	80 ± 1
CL	100

ENVIRONMENTAL SPECIFICATIONS

Charging Temperature Range	0 - 45°C
Discharging Temperature Range	-20 - 60°C
Storage Period 1 Week	-20 - 45°C
Storage Period 1 Month	-10 - 45°C
Storage Period 6 Months	0 - 35°C

BATTERY PROTECTION

Over Charge	4.275 ± 50mV
Over Discharge	2.5V ± 50mV
Over Current	3A to 5A
Short Circuit	Yes

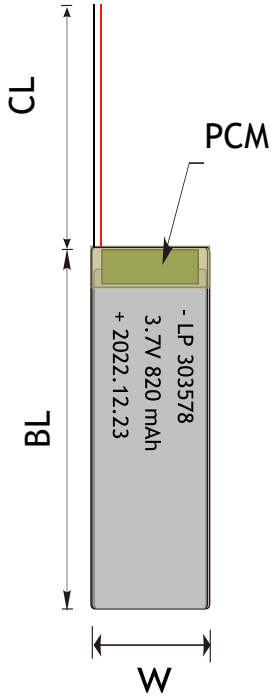

MECHANICAL SPECIFICATIONS

Dimensions	80x 35 x 3 mm(L*W*T)
Weight	13 g
Battery Terminals	WC/ FL *

CERTIFICATION

Certification Approval	PLEASE CONSULT SALES

* WC=With Connector FL=Flying Leads UWP=Blue Wrapped PVC BWP=Black Wrapped PVC BC= Bare Cell

BULK PRODUCTION ACTUAL PICTURES



BARE CELL (BC)



FLYING LEADS (FL)



WITH CONNECTOR (WC)



BLUE WRAPPED PVC (UWP)



BLACK WRAPPED PVC (BWP)

3.7V LIPO BATTERY OPTIONS



Special Ingredients to make batteries work from -40 -85 ° C



Discharging Current up to 100C



Popular JST,Molex,Hirose,Anderson available



LED Power Indicator



Power Button



Upgrade to LifePo4 tech and life circle up to 1500

RELATIVE CURVES

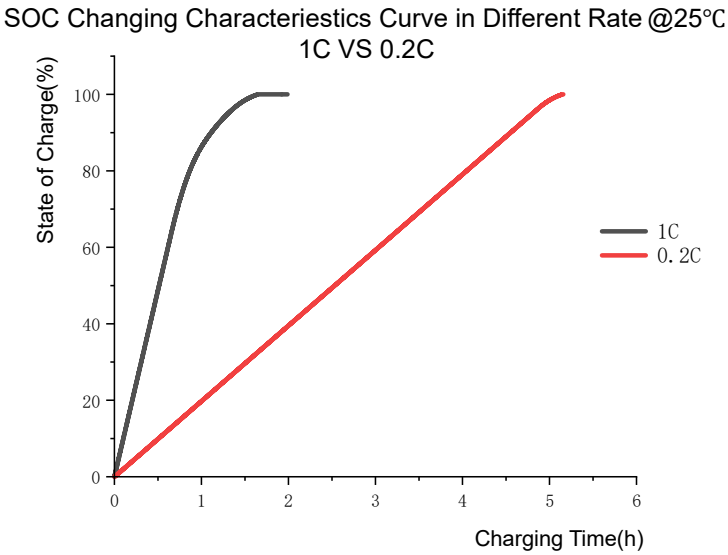

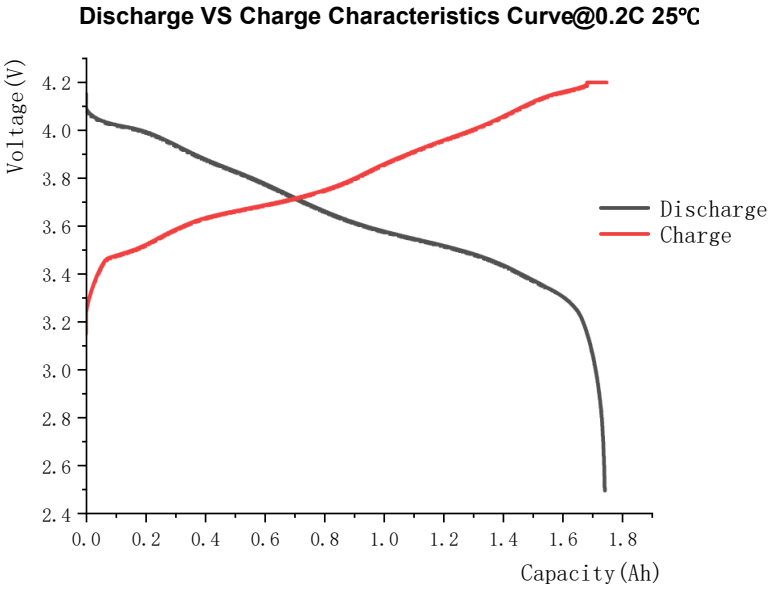

ANNOUNCEMENT

- Obtain container to safely transport LiPo batteries between the labs and use locations. Remove from vehicle once at the destination.
- If a cell is venting or smoking, evacuate, all personnel from the area, closing doors behind you. The area should be secured to ensure that no unnecessary persons enter.
- Always guard against any possible short circuit.
- Avoid changing the battery frequently during use.
- If you notice hot cells, disconnect the charger and remove any external short circuit if present.
- Do not short the wires of your LiPo battery. This is very dangerous and can cause a fire or even an explosion. If you accidentally short the wires of your LiPo battery, either cover it with a fire blanket, or put it in a non-conductive fire-proof container and place it outside away from all flammable objects for at least 30 minutes as chemical reactions can take this long before a fire starts.
- Do not use the battery during charging to avoid overheating and safety accidents.
- ALWAYS immediately disconnect the charging cord from the wall outlet if batteries or equipment develop heat/smoke, unusual odors, or show evidence of bulging (changes in shape or geometry).
- ALWAYS use the "Balance Charge" setting on your charger. If your charger does not have this feature then don't use it and invest in one that does.
- For thermal runaway/fire, activate fire alarm, evacuate, contact public safety.
- Before starting work, if you are designing wearables using lithium-ion batteries, make sure they are easily removeable if they start to react while being worn.