3.7V Lithium Polymer Battery Data Sheet

Model: 303463

Please Find More:

https://www.fpbattery.com/3-7v-600mah-lithium-polymer-battery/

File Number: A/FP3463-17518

File Version: 01

CONTACT

CUSTOMER SERVICE
86.755.3682.7358
sales@fpbattery.com
Hours of Operation:
9:00am-6:00pm CST, Monday to Friday

LEARN MORE ON:
https://www.fpbattery.com/

DNK POWER COMPANY LIMITED

BATTERY SPECIFICATION

Part Number	DNK 303463
Nominal Voltage	3.7 V
Nominal Capacity	645 mAh
Internal Impedence	<60mΩ
Charge Voltage	4.2V
Recommended Charge Current	0.2 C
Allowed Max Charge Current	0.5 C
Output Voltage Range	4.2 - 2.5 V
Recommended Discharge Current	0.2 C
Max Continuous Discharge Current	1 C
Pulse Discharge Current	3 C (10 mS)
Discharge Cut-off Voltage	2.5± 0.05V
Cycle Life to 80% Health	500 (0.2C, 25°C)

1

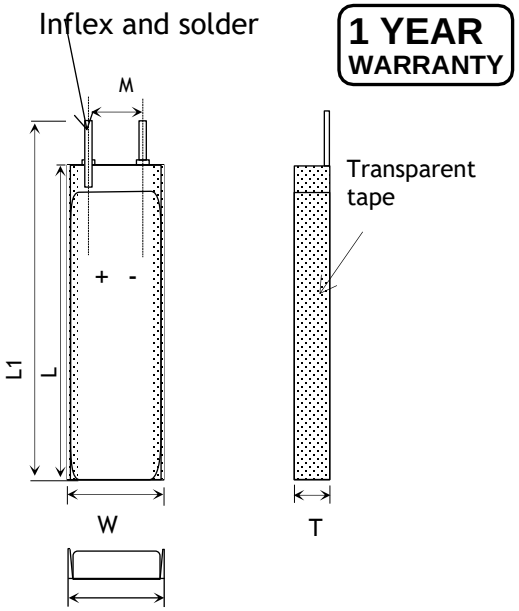

Item	Parameter (mm)
T	3
W	34
M	10
L	63
L_1	65
BL	65 ± 1
CL	100

ENVIRONMENTAL SPECIFICATIONS

Charging Temperature Range	0 - 45°C
Discharging Temperature Range	-20 - 60°C
Storage Period 1 Week	-20 - 45°C
Storage Period 1 Month	-10 - 45°C
Storage Period 6 Months	0 - 35°C

BATTERY PROTECTION

Over Charge	4.275 ± 50mV
Over Discharge	2.5V ± 50mV
Over Current	3A to 5A
Short Circuit	Yes

MECHANICAL SPECIFICATIONS

Dimensions	65x 34 x 3 mm(L*W*T)
Weight	10 g
Battery Terminals	WC/ FL *

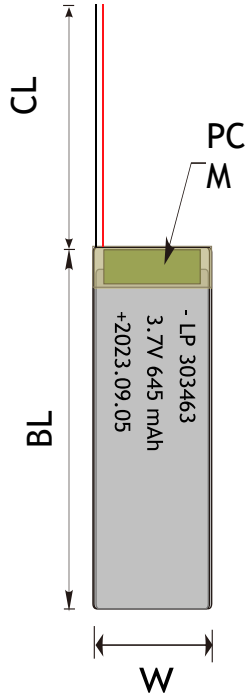

CERTIFICATION

Certification Approval	PLEASE CONSULT SALES

* WC=With Connector FL=Flying Leads UWP=Blue Wrapped PVC
BWP=Black Wrapped PVC BC= Bare Cell

RELATIVE CURVES

Discharge Characteriestics Curve in Different Rate@25℃

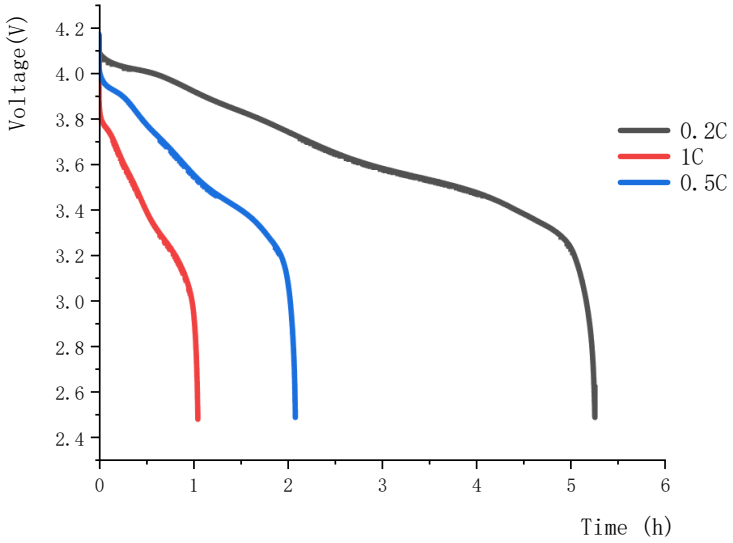

Charge & Discharge Characteriestics in different Rate@25℃

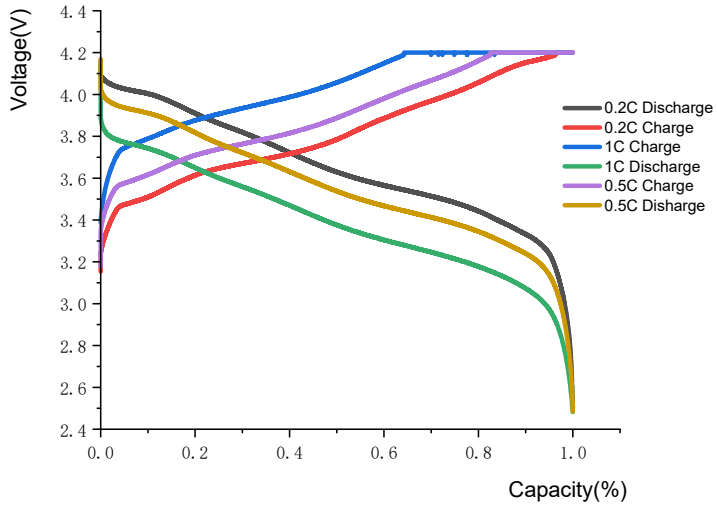

ANNOUNCEMENT

- Never overcharge Batteries beyond the capacity listed on Batteries labels.
- Never charge Batteries that are too hot to the touch (above 100° F). DO NOT handle Batteries until they are cool.
- Never charge batteries unattended.
- Emergency Response and Disposal
- Take necessary safety measures to prevent the battery from short-circuiting.
- ALWAYS evacuate the building to your unit's designated outside meeting location.
- Ensure that you purchase the right type and size of battery that matches the requirements of your equipment.
- Do not mix different types of batteries or mix new and old ones together (e.g. in a power pack).
- Never charge a LiPo battery near an exit. Keep exit egress clear in case of a fire or emergency.
- Store batteries in a location with low humidity, free from corrosive gas & combustible materials, within the temperature range of 14°F (-10°C) and 104°F (40°C). For best results, storage between from 41°F (5°C) and 77°F (25°C) is recommended.
- Avoid using charging methods other than wireless chargers.