3.7V Lithium Polymer Battery Data Sheet

Model: 303450

Please Find More:

https://www.fpbattery.com/3-7v-500mah-lithium-polymer-battery/

File Number: A/FP3450-11655

File Version: 01

CONTACT

CUSTOMER SERVICE
86.755.3682.7358
sales@fpbattery.com
Hours of Operation:
9:00am-6:00pm CST, Monday to Friday

LEARN MORE ON:
https://www.fpbattery.com/

DNK POWER COMPANY LIMITED

BATTERY SPECIFICATION

Part Number	DNK 303450
Nominal Voltage	3.7 V
Nominal Capacity	500 mAh
Internal Impedence	<60mΩ
Charge Voltage	4.2V
Recommended Charge Current	0.2 C
Allowed Max Charge Current	0.5 C
Output Voltage Range	4.2 - 2.5 V
Recommended Discharge Current	0.2 C
Max Continuous Discharge Current	1 C
Pulse Discharge Current	3 C (10 mS)
Discharge Cut-off Voltage	2.5± 0.05V
Cycle Life to 80% Health	500 (0.2C, 25°C)

1

1 YEAR WARRANTY

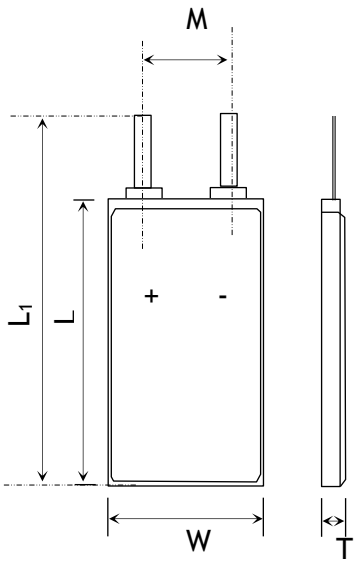

Item	Parameter (mm)
T	3
W	34
M	10
L	50
L_1	52
BL	52 ± 1
CL	100

ENVIRONMENTAL SPECIFICATIONS

Charging Temperature Range	0 - 45°C
Discharging Temperature Range	-20 - 60°C
Storage Period 1 Week	-20 - 45°C
Storage Period 1 Month	-10 - 45°C
Storage Period 6 Months	0 - 35°C

BATTERY PROTECTION

Over Charge	4.275 ± 50mV
Over Discharge	2.5V ± 50mV
Over Current	3A to 5A
Short Circuit	Yes

MECHANICAL SPECIFICATIONS

Dimensions	52x 34 x 3 mm(L*W*T)
Weight	Around 8 g
Battery Terminals	WC/ FL *

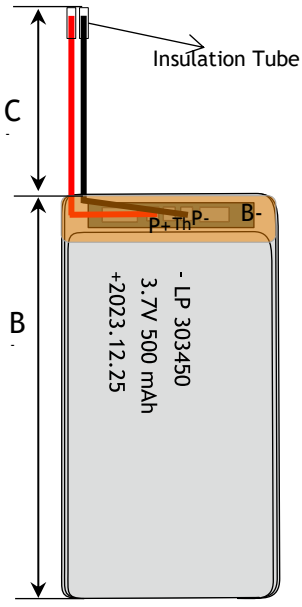

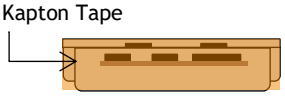

CERTIFICATION

Certification Approval	PLEASE CONSULT SALES

* WC=With Connector FL=Flying Leads UWP=Blue Wrapped PVC BWP=Black Wrapped PVC BC= Bare Cell

RELATIVE CURVES

Charge Characteristics

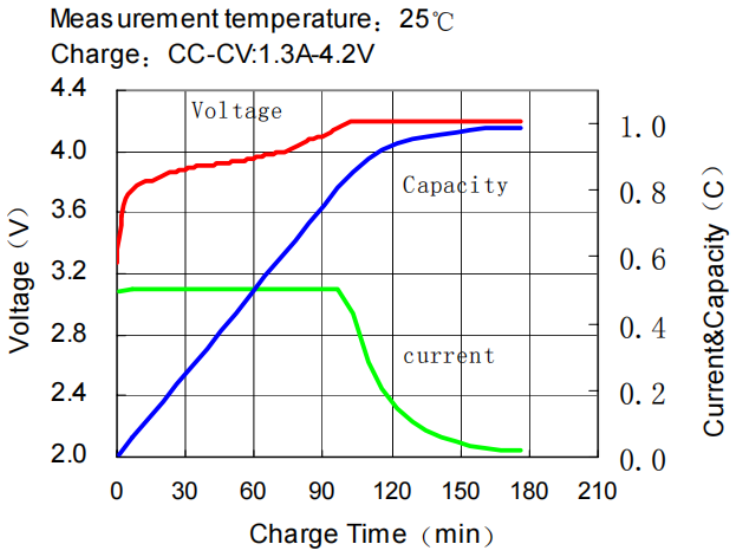

Rate Discharge Characteristics

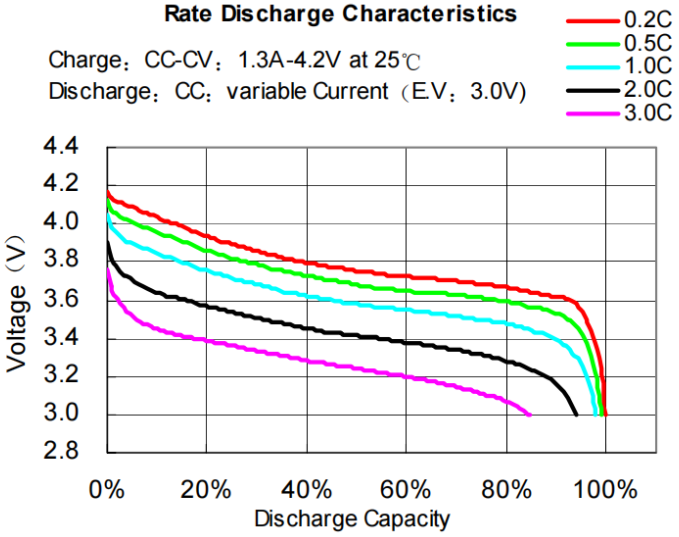

ANNOUNCEMENT

- Never store loose Batteries together, the Batteries' terminals may contact one another causing a short circuit.
- Connecting the LiPo Battery to the Charger (Read the Charger Instructions)
- Charge on non-conductive, non-combustible surfaces.
- Never charge Batteries inside of the model.
- Never charge a battery pack that has been punctured or damaged.
- ALWAYS tape over the terminals/contacts of each battery (a fire can start if battery terminals come into contact with each other or other metallic items in the area).
- ALWAYS use the correct battery and charger size and type that is specified for the device.
- Read and understand the battery's instruction manual carefully before use.
- LiPo safe bags help contain heat and flames that results if a Li-Ion battery combusts during charging or while in storage.
- Always balance charge batteries using the charger's balance charging option. Otherwise, an unbalanced cell may become over charged. This will reduce the life of the battery, and possibly cause a fire which could result in personal injury and property damage.
- Never charge a battery that is still warm after usage, and never use a battery that is still warm from charging.