3.7V Lithium Polymer Battery Data Sheet

Model: 303065

Please Find More:

https://www.fpbattery.com/3-7v-500mah-lithium-polymer-battery/

File Number: A/FP3065-20269

File Version: 01

CONTACT

CUSTOMER SERVICE
86.755.3682.7358
sales@fpbattery.com
Hours of Operation:
9:00am-6:00pm CST, Monday to Friday

LEARN MORE ON:
https://www.fpbattery.com/

DNK POWER COMPANY LIMITED

BATTERY SPECIFICATION

Part Number	DNK 303065
Nominal Voltage	3.7 V
Nominal Capacity	585 mAh
Internal Impedence	<60mΩ
Charge Voltage	4.2V
Recommended Charge Current	0.2 C
Allowed Max Charge Current	0.5 C
Output Voltage Range	4.2 - 2.5 V
Recommended Discharge Current	0.2 C
Max Continuous Discharge Current	1 C
Pulse Discharge Current	3 C (10 mS)
Discharge Cut-off Voltage	2.5± 0.05V
Cycle Life to 80% Health	500 (0.2C, 25°C)

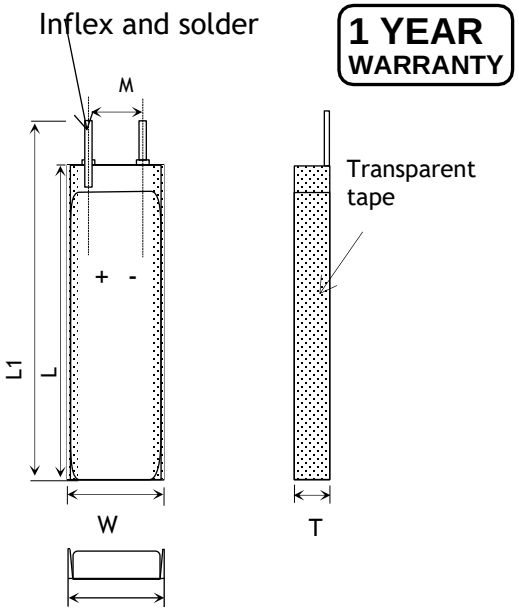

Item	Parameter (mm)
T	3
W	30
M	10
L	65
L_1	67
BL	67 ± 1
CL	100

ENVIRONMENTAL SPECIFICATIONS

Charging Temperature Range	0 - 45°C
Discharging Temperature Range	-20 - 60°C
Storage Period 1 Week	-20 - 45°C
Storage Period 1 Month	-10 - 45°C
Storage Period 6 Months	0 - 35°C

BATTERY PROTECTION

Over Charge	4.275 ± 50mV
Over Discharge	2.5V ± 50mV
Over Current	3A to 5A
Short Circuit	Yes

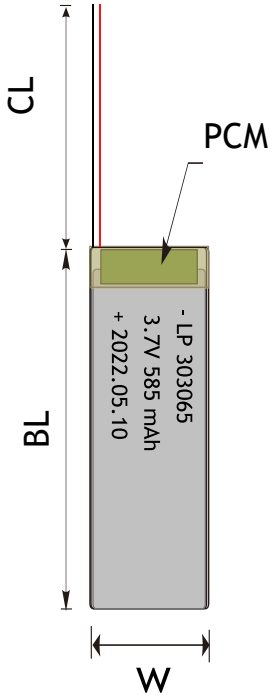

MECHANICAL SPECIFICATIONS

Dimensions	67x 30 x 3 mm(L*W*T)
Weight	9 g
Battery Terminals	WC/ FL *

CERTIFICATION

Certification Approval	PLEASE CONSULT SALES

* WC=With Connector FL=Flying Leads UWP=Blue Wrapped PVC BWP=Black Wrapped PVC BC= Bare Cell

BULK PRODUCTION ACTUAL PICTURES



BARE CELL (BC)



FLYING LEADS (FL)



WITH CONNECTOR (WC)



BLUE WRAPPED PVC (UWP)



BLACK WRAPPED PVC (BWP)

3.7V LIPO BATTERY OPTIONS



Special Ingredients to make batteries work from -40 -85 ° C



Discharging Current up to 100C



Popular JST,Molex,Hirose,Anderson available



LED Power Indicator



Power Button



Upgrade to LifePo4 tech and life circle up to 1500

RELATIVE CURVES

Charge & Discharge Characteriestics in different Rate@25℃

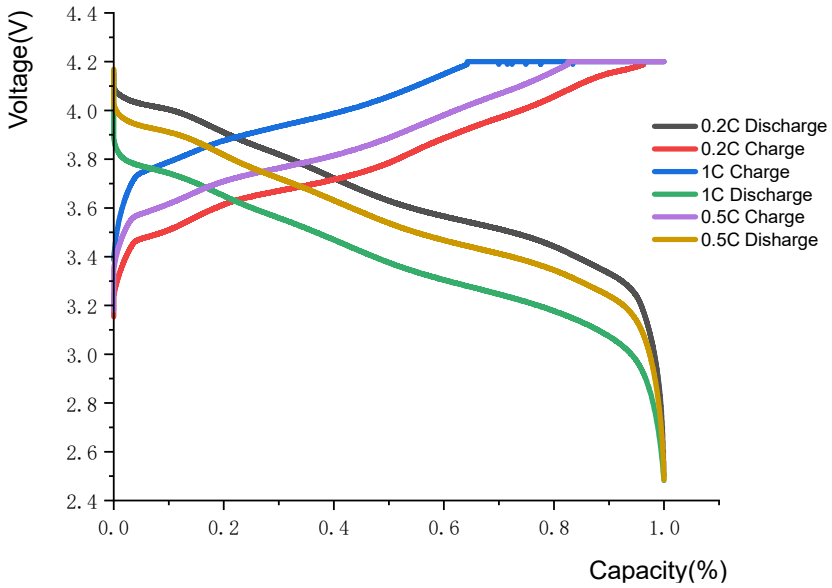

Discharge VS Charge Characteristics Curve@0.2C 25℃

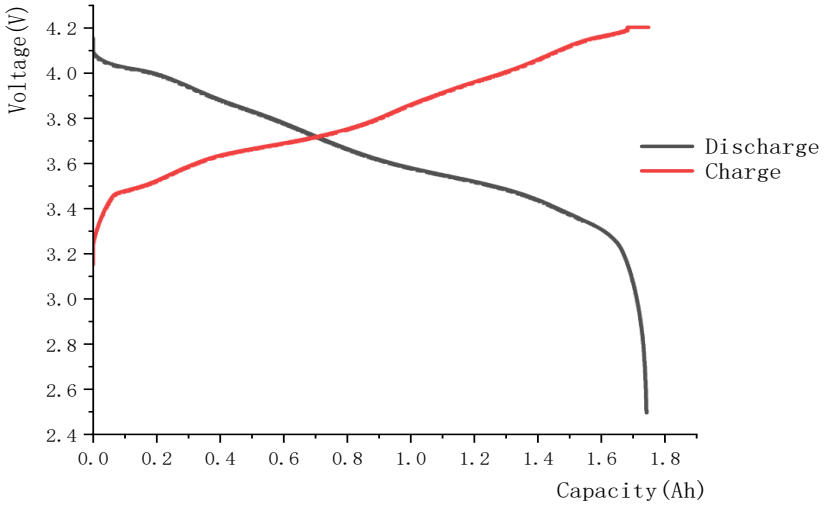

ANNOUNCEMENT

- Always verify voltage of Batteries before use, this is especially important for packs that have been out of service for greater than six (months.
- If the electrolyte in the cells gets on your skin, wash the area thoroughly with soap and water. If it gets in your eyes, rinse at emergency eyewash station for 15 minutes with cool water and seek immediate medical attention.
- Check and double check that you have set the correct voltage/number of cells and the maximum current does not exceed the stated charge rate (normally 1C). If using an automatic charger, check that it has detected the correct number of cells. Check it again through every stage of charging.
- The cells shall never be soaked with liquids such as water, seawater drinks such as soft drinks, juices coffee or others.
- Avoid prolonged exposure to high temperatures
- Avoid restarting the device frequently on the way to using the battery.
- Obtain recycling container from EHRS for all batteries except LiPo.
- Never put batteries in your pocket or non fireproof bags this may cause the battery to short circuit.
- Always consult the manufacturerGspecific battery manual for proper instructions.
- Always verify voltage of Batteries before use, this is especially important for packs that have been out of service for greater than six (months.
- If you start seeing any physical changes to the battery while charging example puffing, STOP charging immediately and dispose of the battery responsibly.