3.7V Lithium Polymer Battery Data Sheet

Model: 302962

Please Find More:

https://www.fpbattery.com/3-7v-500mah-lithium-polymer-battery/

File Number: A/FP2962-20148

File Version: 01

CONTACT

CUSTOMER SERVICE
86.755.3682.7358
sales@fpbattery.com
Hours of Operation:
9:00am-6:00pm CST, Monday to Friday

LEARN MORE ON:
https://www.fpbattery.com/

DNK POWER COMPANY LIMITED

BATTERY SPECIFICATION

Part Number	DNK 302962
Nominal Voltage	3.7 V
Nominal Capacity	540 mAh
Internal Impedence	<60mΩ
Charge Voltage	4.2V
Recommended Charge Current	0.2 C
Allowed Max Charge Current	0.5 C
Output Voltage Range	4.2 - 2.5 V
Recommended Discharge Current	0.2 C
Max Continuous Discharge Current	1 C
Pulse Discharge Current	3 C (10 mS)
Discharge Cut-off Voltage	2.5± 0.05V
Cycle Life to 80% Health	500 (0.2C, 25°C)

1

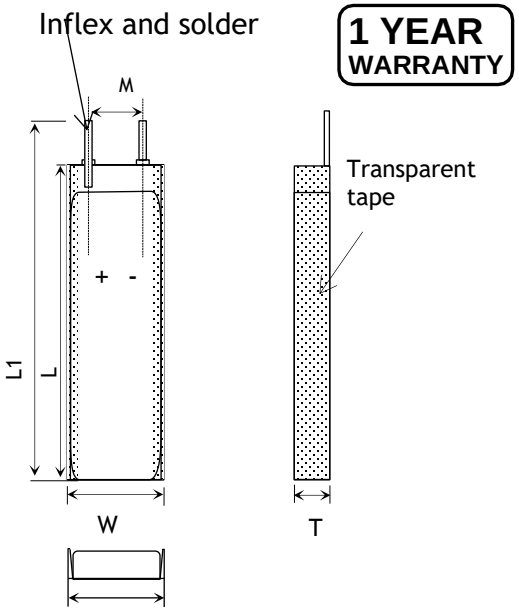

Item	Parameter (mm)
T	3
W	29
M	10
L	62
L_1	64
BL	64 ± 1
CL	100

ENVIRONMENTAL SPECIFICATIONS

Charging Temperature Range	0 - 45°C
Discharging Temperature Range	-20 - 60°C
Storage Period 1 Week	-20 - 45°C
Storage Period 1 Month	-10 - 45°C
Storage Period 6 Months	0 - 35°C

BATTERY PROTECTION

Over Charge	4.275 ± 50mV
Over Discharge	2.5V ± 50mV
Over Current	3A to 5A
Short Circuit	Yes

MECHANICAL SPECIFICATIONS

Dimensions	64x 29 x 3 mm(L*W*T)
Weight	9 g
Battery Terminals	WC/ FL *

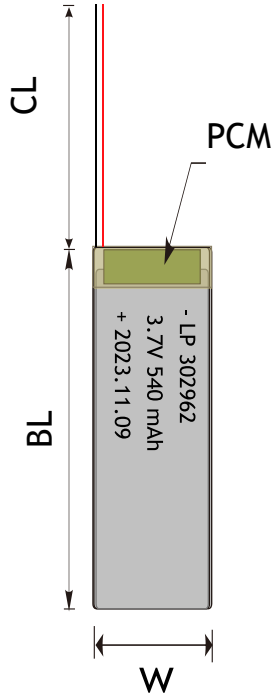

CERTIFICATION

Certification Approval	PLEASE CONSULT SALES

* WC=With Connector FL=Flying Leads UWP=Blue Wrapped PVC
BWP=Black Wrapped PVC BC= Bare Cell

BULK PRODUCTION ACTUAL PICTURES



BARE CELL (BC)



FLYING LEADS (FL)



WITH CONNECTOR (WC)



BLUE WRAPPED PVC (UWP)



BLACK WRAPPED PVC (BWP)

3.7V LIPO BATTERY OPTIONS



Special Ingredients to make batteries work from -40 -85 ° C



Discharging Current up to 100C



Popular JST,Molex,Hirose,Anderson available



LED Power Indicator



Power Button



Upgrade to LifePo4 tech and life circle up to 1500

RELATIVE CURVES

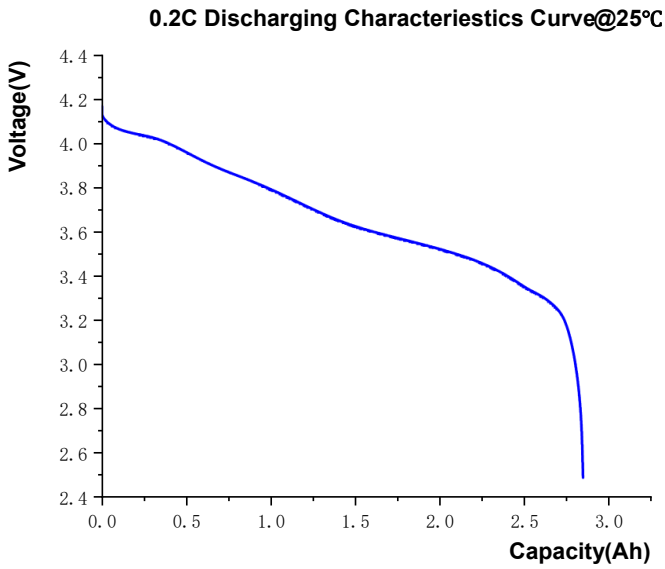

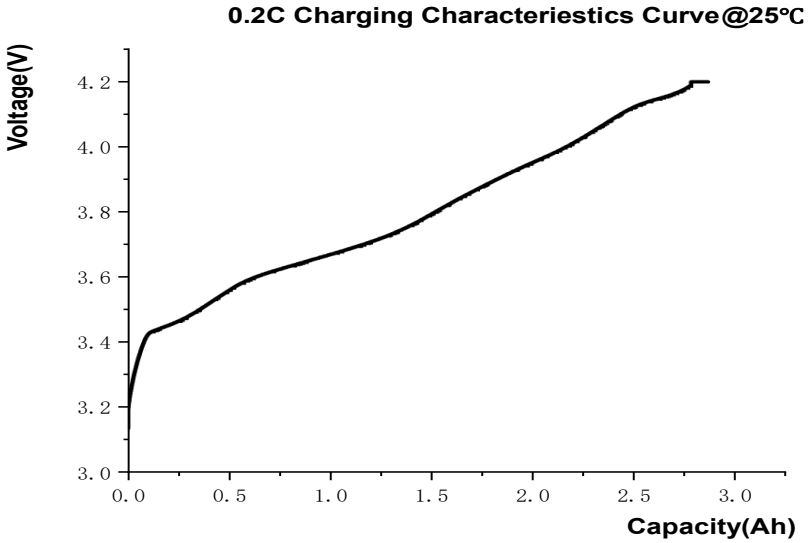

ANNOUNCEMENT

- Intact batteries can be disposed of as Universal Waste. If the battery is greater than 9V, tape the terminals before disposal.
- Use a reliable power adapter to avoid unstable current output.
- Do not fully discharge your LiPo battery pack. Discharging a LiPo beyond it's critical minimum voltage (often 3.0v) can cause damage to the battery.
- Never charge Batteries inside of the model.
- Never put batteries in your pocket or non fireproof bags this may cause the battery to short circuit.
- Never use a charger that is NOT specifically designed to charge Lithium Polymer cells.
- Use lithium battery safety bags/containers during charging.
- Do not put batteries in contact with conductive materials, water, seawater, strong oxidizers
- LiPo batteries must only be charged with a manufacturer recommended LiPo charger.
- Always charge the battery in an isolated safe area away from any flammable/combustible materials. Never charge a LiPo battery on a wooden workbench, inside an automobile,or on any flammable surface. Charge LiPo batteries on a concrete surface where there are no flammable objects within 10 feet (3 meters) of the charging area. Always charge your LiPo battery in a fireproof container.
- ALWAYS immediately disconnect the charging cord from the wall outlet if batteries or equipment develop heat/smoke, unusual odors, or show evidence of bulging (changes in shape or geometry).