3.7V Lithium Polymer Battery Data Sheet

Model: 562828

Please Find More:

https://www.fpbattery.com/3-7v-500mah-lithium-polymer-battery/

File Number: A/FP2828-2071

File Version: 01

CONTACT

CUSTOMER SERVICE
86.755.3682.7358
sales@fpbattery.com
Hours of Operation:
9:00am-6:00pm CST, Monday to Friday

LEARN MORE ON:
https://www.fpbattery.com/

DNK POWER COMPANY LIMITED

BATTERY SPECIFICATION

Part Number	DNK 562828
Nominal Voltage	3.7 V
Nominal Capacity	540 mAh
Internal Impedence	<60mΩ
Charge Voltage	4.2V
Recommended Charge Current	0.2 C
Allowed Max Charge Current	0.5 C
Output Voltage Range	4.2 - 2.5 V
Recommended Discharge Current	0.2 C
Max Continuous Discharge Current	1 C
Pulse Discharge Current	3 C (10 mS)
Discharge Cut-off Voltage	2.5± 0.05V
Cycle Life to 80% Health	500 (0.2C, 25°C)

1

1 YEAR WARRANTY

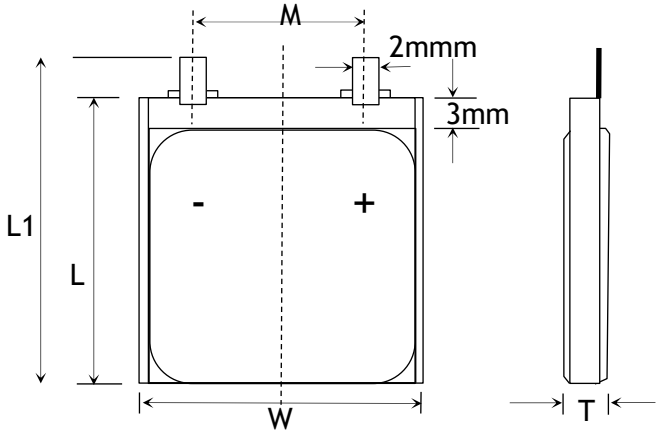

Item	Parameter (mm)
T	5
W	28
M	10
L	28
L_1	30
BL	30 ± 1
CL	100

ENVIRONMENTAL SPECIFICATIONS

Charging Temperature Range	0 - 45°C
Discharging Temperature Range	-20 - 60°C
Storage Period 1 Week	-20 - 45°C
Storage Period 1 Month	-10 - 45°C
Storage Period 6 Months	0 - 35°C

BATTERY PROTECTION

Over Charge	4.275 ± 50mV
Over Discharge	2.5V ± 50mV
Over Current	3A to 5A
Short Circuit	Yes

MECHANICAL SPECIFICATIONS

Dimensions	30x 28 x 5 mm(L*W*T)
Weight	Around 9 g
Battery Terminals	WC/ FL *

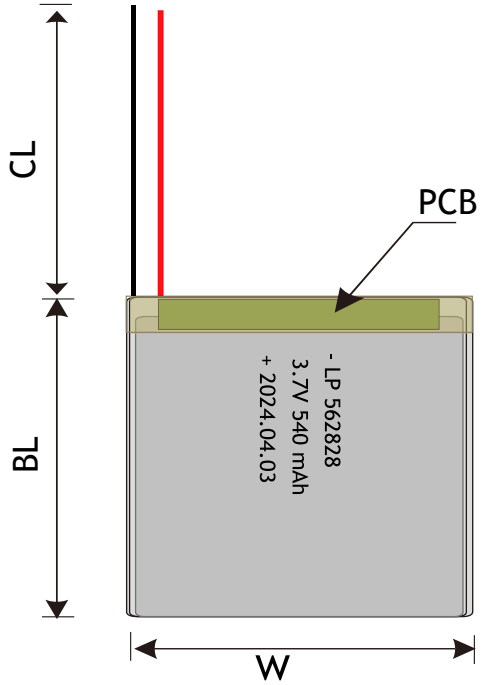

CERTIFICATION

Certification Approval	PLEASE CONSULT SALES

* WC=With Connector FL=Flying Leads UWP=Blue Wrapped PVC
BWP=Black Wrapped PVC BC= Bare Cell

RELATIVE CURVES

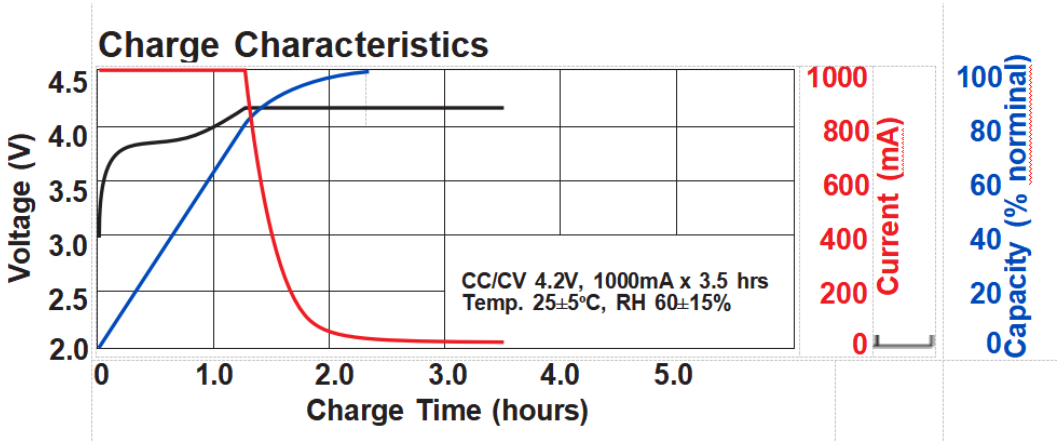

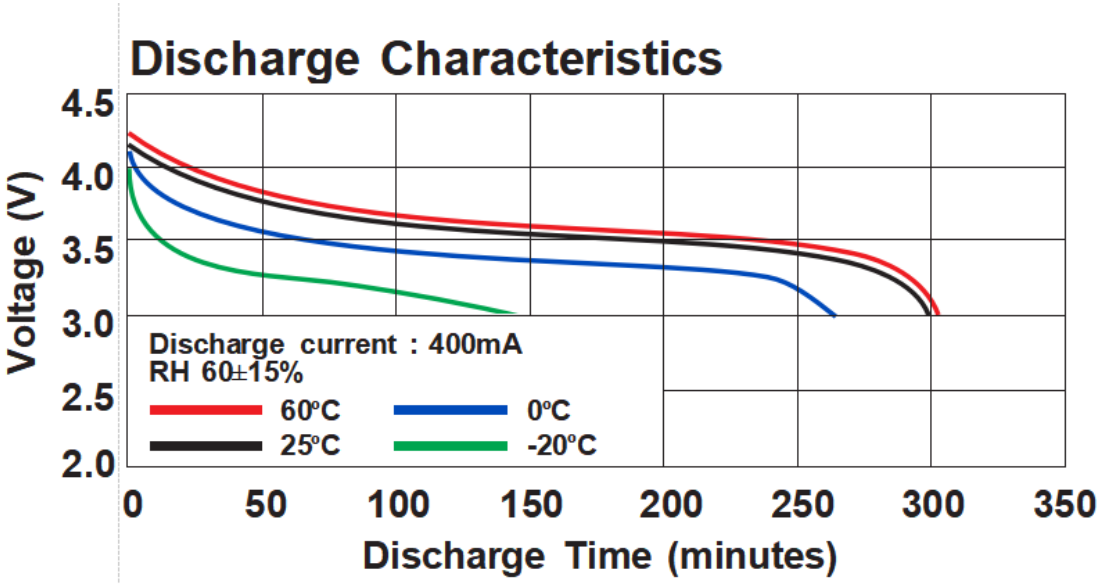

ANNOUNCEMENT

- Never incinerate nor dispose of the cells in a fire. These may cause firing of the cells, which is very dangerous and is prohibited.
- Only charge in an isolated area away from other flammable materials and on a non conductive and non flammable surface. Use a fireproof container. LiPo battery fires can not be extinguished. If a fire occurs, contain it by covering it with a fire blanket until it burns itself out.
- Do not expose the battery to direct sunlight for extended periods of time.
- Storing LiPo batteries at temperatures higher than 170˚F (76˚C) for more than 2 hours may result in battery damage or possibly fire.
- Always charge batteries at a rate of 1c (one (times the capacity unless specified by the manufacturer
- Keep all batteries out of the reach of children.
- Double check that the setting for the lithium polymer charger is correct for the pack being charged – this includes the cell count as well as the current settings.
- Do not use a damaged charger that could cause the battery to overcharge or over discharge.
- Never charge LiPo batteries near any flammable products, including liquids or gases.
- Only use chargers provided by and/or approved by the manufacturer.
- Do not overcharge the battery and observe the charger and battery charge time instructions.