3.7V Lithium Polymer Battery Data Sheet

Model: 554040

Please Find More:

https://www.fpbattery.com/3-7v-800mah-lithium-polymer-battery/

File Number: A/FP4040-1972

File Version: 01

CONTACT

CUSTOMER SERVICE
86.755.3682.7358
sales@fpbattery.com
Hours of Operation:
9:00am-6:00pm CST, Monday to Friday

LEARN MORE ON:
https://www.fpbattery.com/

DNK POWER COMPANY LIMITED

BATTERY SPECIFICATION

Part Number	DNK 554040
Nominal Voltage	3.7 V
Nominal Capacity	880 mAh
Internal Impedence	<60mΩ
Charge Voltage	4.2V
Recommended Charge Current	0.2 C
Allowed Max Charge Current	0.5 C
Output Voltage Range	4.2 - 2.5 V
Recommended Discharge Current	0.2 C
Max Continuous Discharge Current	1 C
Pulse Discharge Current	3 C (10 mS)
Discharge Cut-off Voltage	2.5± 0.05V
Cycle Life to 80% Health	500 (0.2C, 25°C)

1

1 YEAR WARRANTY

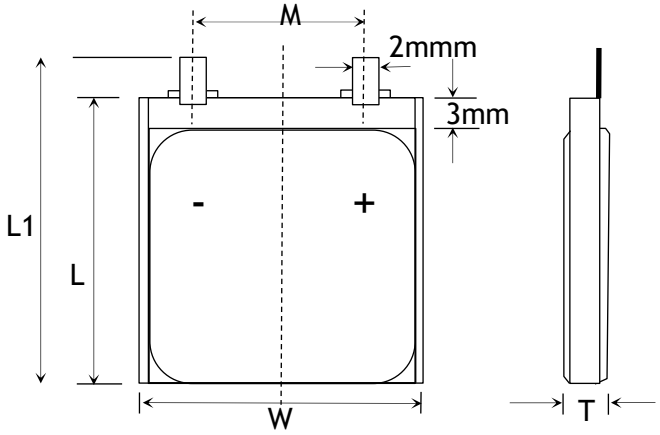

Item	Parameter (mm)
T	5
W	40
M	10
L	40
L_1	42
BL	42 ± 1
CL	100

ENVIRONMENTAL SPECIFICATIONS

Charging Temperature Range	0 - 45°C
Discharging Temperature Range	-20 - 60°C
Storage Period 1 Week	-20 - 45°C
Storage Period 1 Month	-10 - 45°C
Storage Period 6 Months	0 - 35°C

BATTERY PROTECTION

Over Charge	4.275 ± 50mV
Over Discharge	2.5V ± 50mV
Over Current	3A to 5A
Short Circuit	Yes

MECHANICAL SPECIFICATIONS

Dimensions	42x 40 x 5 mm(L*W*T)
Weight	Around 14 g
Battery Terminals	WC/ FL *

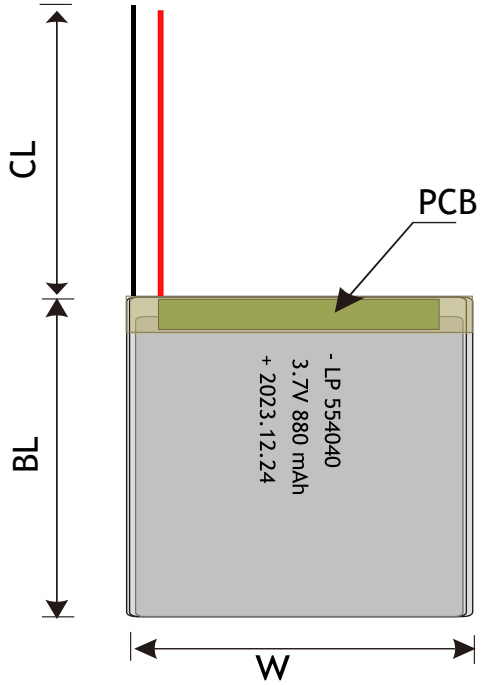

CERTIFICATION

Certification Approval	PLEASE CONSULT SALES

* WC=With Connector FL=Flying Leads UWP=Blue Wrapped PVC
BWP=Black Wrapped PVC BC= Bare Cell

RELATIVE CURVES

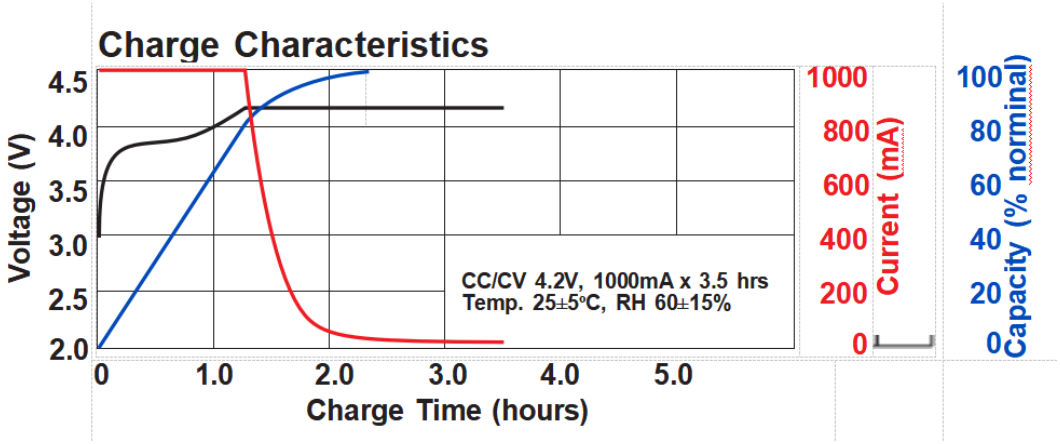

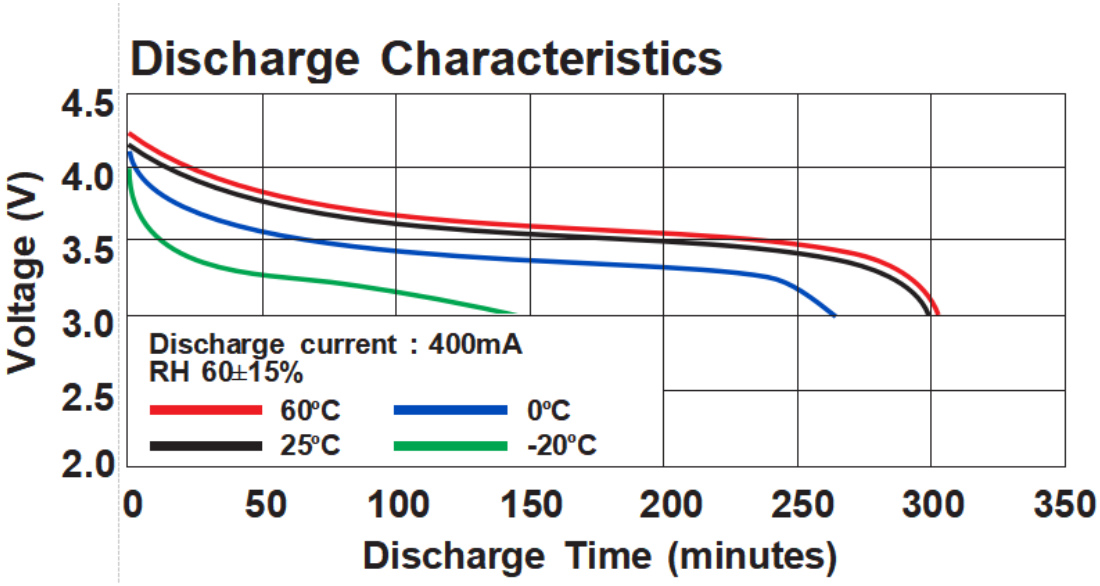

ANNOUNCEMENT

- Avoid storing unused batteries for long periods of time, and perform regular battery maintenance and charging.
- Test equipment for short circuits prior to installing batteries.
- If you have dropped or damageda LiPo battery in anyway, do not attempt to charge it.
- Ensure connectors are insulated correctly to prevent short circuit in handling or storage.
- When the battery is empty, recharge it immediately. Do not store an empty battery, the battery will continue to discharge, it will fall below the minimum voltage and become unusable.
- Do not expose the battery to temperature extremes, such as high or low temperatures.
- Have a class ABC or CO2 fire extinguisher nearby the storage area.
- Avoid storing unused batteries for long periods of time, and perform regular battery maintenance and charging.
- Ensure connectors are insulated correctly to prevent short circuit in handling or storage.
- Do not use batteries with physical damage, such as dented, cracked or leaking batteries.
- Have a class ABC or CO2 fire extinguisher nearby the storage area.