# 3.7V Lithium Polymer Battery Data Sheet

Model: 553636

Please Find More:

https://www.fpbattery.com/3-7v-650mah-lithium-polymer-battery/

File Number: A/FP3636-2010

File Version: 01


CONTACT

CUSTOMER SERVICE
86.755.3682.7358
sales@fpbattery.com
Hours of Operation:
9:00am-6:00pm CST, Monday to Friday

LEARN MORE ON:
https://www.fpbattery.com/

DNK POWER COMPANY LIMITED

## BATTERY SPECIFICATION

| | |
|---|---|
| Part Number | DNK 553636 |
| Nominal Voltage | 3.7 V |
| Nominal Capacity | 715 mAh |
| Internal Impedence | <60mΩ |
| Charge Voltage | 4.2V |
| Recommended Charge Current | 0.2 C |
| Allowed Max Charge Current | 0.5 C |
| Output Voltage Range | 4.2 - 2.5 V |
| Recommended Discharge Current | 0.2 C |
| Max Continuous Discharge Current | 1 C |
| Pulse Discharge Current | 3 C (10 mS) |
| Discharge Cut-off Voltage | 2.5± 0.05V |
| Cycle Life to 80% Health | 500 (0.2C, 25°C) |

1

**1 YEAR WARRANTY**

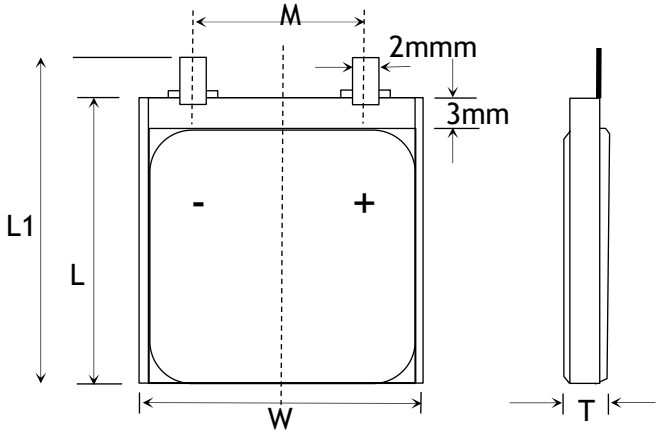


| Item | Parameter (mm) |
|---|---|
| T | 5 |
| W | 36 |
| M | 10 |
| L | 36 |
| $L_1$ | 38 |
| BL | 38 ± 1 |
| CL | 100 |

## ENVIRONMENTAL SPECIFICATIONS

| | |
|---|---|
| Charging Temperature Range | 0 - 45°C |
| Discharging Temperature Range | -20 - 60°C |
| Storage Period 1 Week | -20 - 45°C |
| Storage Period 1 Month | -10 - 45°C |
| Storage Period 6 Months | 0 - 35°C |

## BATTERY PROTECTION

| | |
|---|---|
| Over Charge | 4.275 ± 50mV |
| Over Discharge | 2.5V ± 50mV |
| Over Current | 3A to 5A |
| Short Circuit | Yes |

## MECHANICAL SPECIFICATIONS

| | |
|---|---|
| Dimensions | 38x 36 x 5 mm(L*W*T) |
| Weight | Around 11 g |
| Battery Terminals | WC/ FL * |

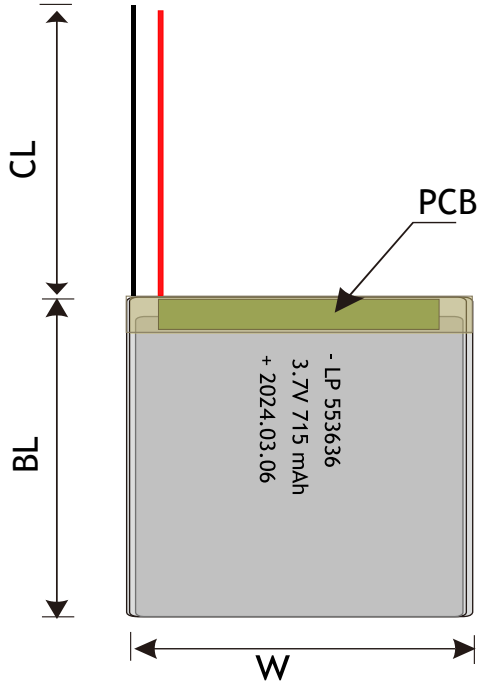


## CERTIFICATION

| | |
|---|---|
| Certification Approval | PLEASE CONSULT SALES |

* WC=With Connector FL=Flying Leads UWP=Blue Wrapped PVC
BWP=Black Wrapped PVC BC= Bare Cell

# RELATIVE CURVES

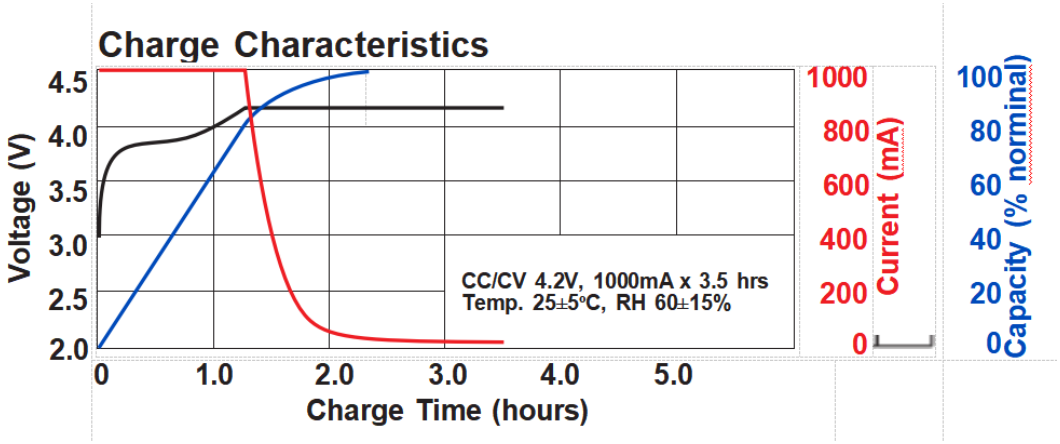


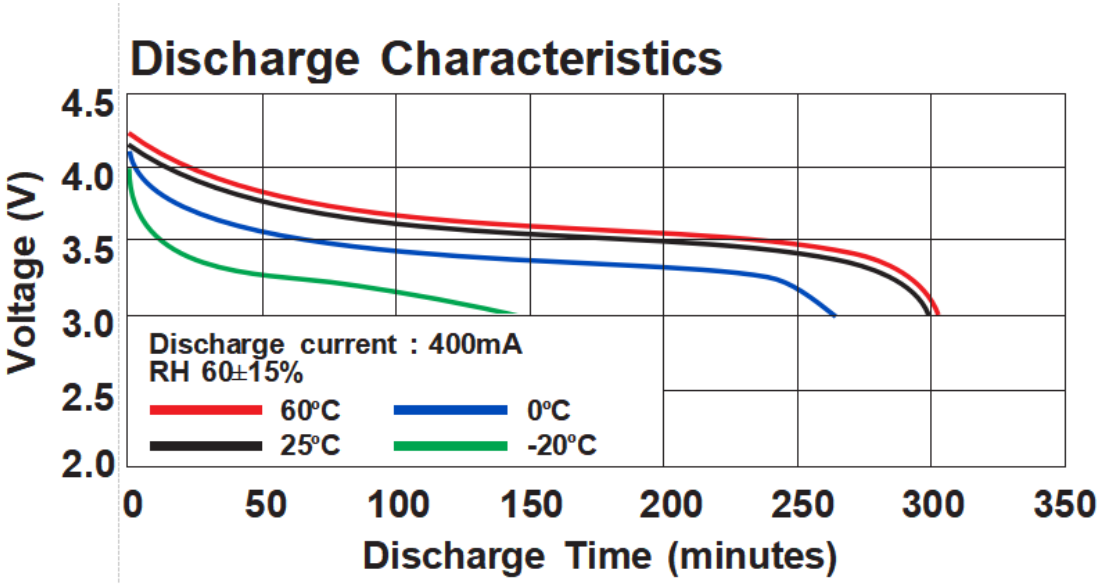


# ANNOUNCEMENT

- Never charge a LiPo battery while inside your model.
- Always set the charger to proper cell count and/or voltage listed on Batteries' labels.
- Use a reliable power adapter to avoid unstable current output.
- Do not charge any pack containing one or more damaged or swollen/puffed cell as there is a high risk of a fire. Dispose of them.
- NEVER attempt to extinguish this type of fire yourself – portable fire extinguishers have proven to be ineffective in extinguishing Li-Ion and LiPo battery fires.
- ALWAYS purchase and use batteries and devices that are listed or approved by a Nationally Recognized Testing Laboratory, such as Underwriter's Laboratories (UL) or Intertek (ETL).
- Take maximum care when handling and installing LiPo batteries made of flexible aluminum packaging in your model. These batteries are quickly damaged on sharp edges or spikes.
- Regularly check the battery case for leaks or damage.
- Never charge a LiPo battery on a wooden or other combustible (carpeted) surface. Always charge LiPo batteries on surfaces made of cement, steel, ceramic or stone.
- Always charge batteries at a rate of 1c (one (times the capacity unless specified by the manufacturer
- Before starting work,ensure that a written experimental protocol including safety information is available.