3.7V Lithium Polymer Battery Data Sheet

Model: 553629

Please Find More:

https://www.fpbattery.com/3-7v-500mah-lithium-polymer-battery/

File Number: A/FP3629-315

File Version: 01

CONTACT

CUSTOMER SERVICE
86.755.3682.7358
sales@fpbattery.com
Hours of Operation:
9:00am-6:00pm CST, Monday to Friday

LEARN MORE ON:
https://www.fpbattery.com/

DNK POWER COMPANY LIMITED

BATTERY SPECIFICATION

Part Number	DNK 553629
Nominal Voltage	3.7 V
Nominal Capacity	575 mAh
Internal Impedence	<60mΩ
Charge Voltage	4.2V
Recommended Charge Current	0.2 C
Allowed Max Charge Current	0.5 C
Output Voltage Range	4.2 - 2.5 V
Recommended Discharge Current	0.2 C
Max Continuous Discharge Current	1 C
Pulse Discharge Current	3 C (10 mS)
Discharge Cut-off Voltage	2.5± 0.05V
Cycle Life to 80% Health	500 (0.2C, 25°C)

1

1 YEAR WARRANTY

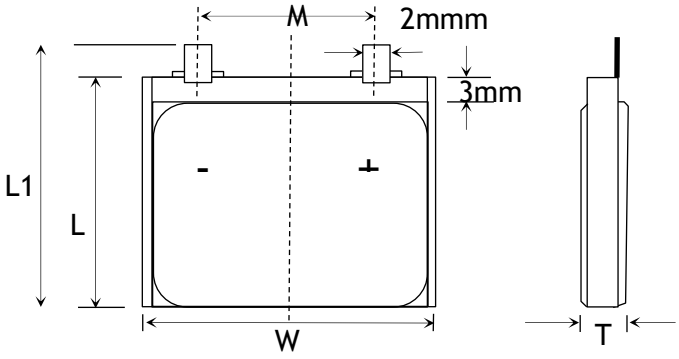

Item	Parameter (mm)
T	5
W	36
M	10
L	29
L_1	31
BL	31 ± 1
CL	100

ENVIRONMENTAL SPECIFICATIONS

Charging Temperature Range	0 - 45°C
Discharging Temperature Range	-20 - 60°C
Storage Period 1 Week	-20 - 45°C
Storage Period 1 Month	-10 - 45°C
Storage Period 6 Months	0 - 35°C

BATTERY PROTECTION

Over Charge	4.275 ± 50mV
Over Discharge	2.5V ± 50mV
Over Current	3A to 5A
Short Circuit	Yes

MECHANICAL SPECIFICATIONS

Dimensions	31x 36 x 5 mm(L*W*T)
Weight	Around 9 g
Battery Terminals	WC/ FL *

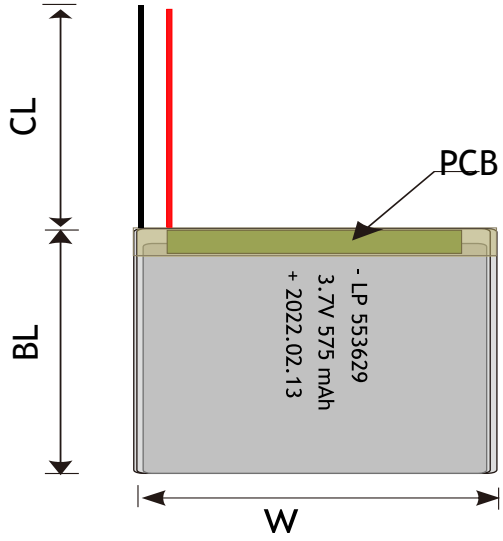

CERTIFICATION

Certification Approval	PLEASE CONSULT SALES

* WC=With Connector FL=Flying Leads UWP=Blue Wrapped PVC
BWP=Black Wrapped PVC BC= Bare Cell

Find More: https://www.fpbattery.com/3-7v-500mah-lithium-polymer-battery/

BULK PRODUCTION ACTUAL PICTURES



BARE CELL (BC)



FLYING LEADS (FL)



WITH CONNECTOR (WC)



BLUE WRAPPED PVC (UWP)



BLACK WRAPPED PVC (BWP)

3.7V LIPO BATTERY OPTIONS



Special Ingredients to make batteries work from -40 -85 ° C



Discharging Current up to 100C



Popular JST,Molex,Hirose,Anderson available



LED Power Indicator



Power Button



Upgrade to LifePo4 tech and life circle up to 1500

RELATIVE CURVES

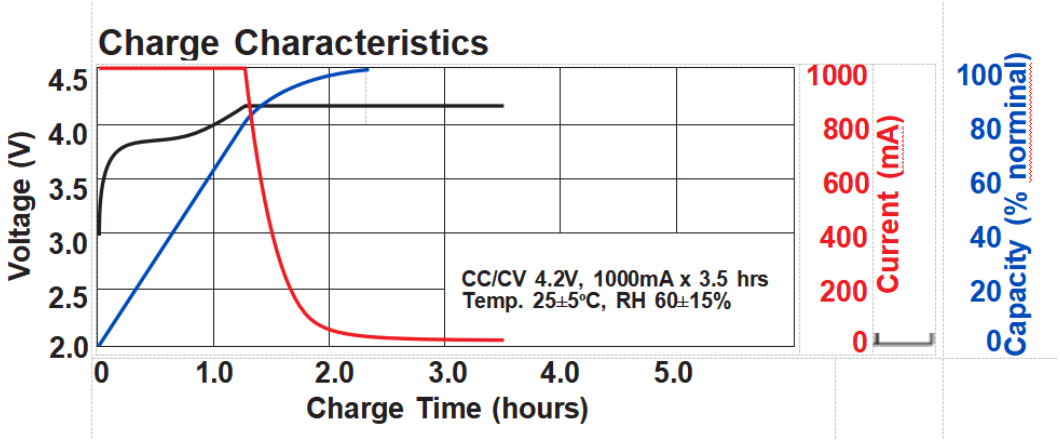

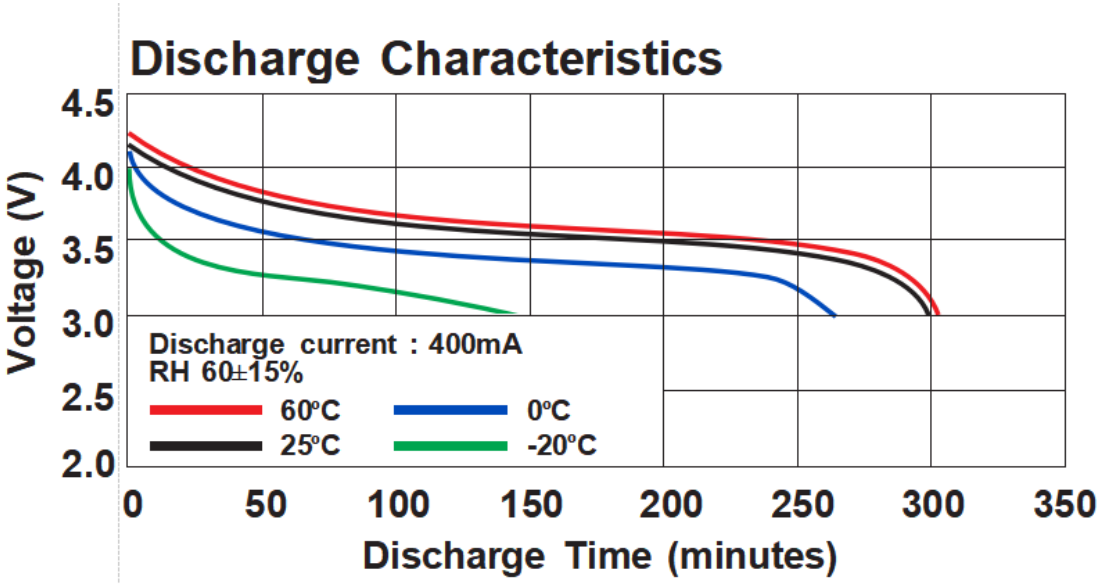

ANNOUNCEMENT

- A LiPo Sack or metal/ceramic storage container is safest. Always store your LiPo's partially charged so they maintain their performance levels overtime; there is no need to cycle them unless When storing batteries for extended periods, store at a half charged state. stored for periods longer than 36 months.
- Use only a charger designed for charging LiPo batteries. Never use any other type of charger.
- ALWAYS identify and separate one-time-use batteries from rechargeable batteries.
- When the battery is empty, recharge it immediately. Do not store an empty battery, the battery will continue to discharge, it will fall below the minimum voltage and become unusable.
- Before starting work, remove watches, metal rings, and other metal jewelry when working with or near large batteries or power supplies. If the metal from your jewelry comes into contact with a terminal, you become part of the circuit. Effects can vary from a small electric shock to burns or even electrocution, depending on the power of the battery.
- ALWAYS identify and separate one-time-use batteries from rechargeable batteries.
- Maintain the minimum quantity of batteries possible.
- Charge only with an approved LiPo charger, according to the parameters for the particular battery
- Never charge a LiPo battery while inside your model.
- Use only a charger designed for charging LiPo batteries. Never use any other type of charger.

- Avoid prolonged use of higher power devices.