3.7V Lithium Polymer Battery Data Sheet

Model: 504335

Please Find More:

https://www.fpbattery.com/3-7v-750mah-lithium-polymer-battery/

File Number: A/FP4335-348

File Version: 01

CONTACT

CUSTOMER SERVICE
86.755.3682.7358
sales@fpbattery.com
Hours of Operation:
9:00am-6:00pm CST, Monday to Friday

LEARN MORE ON:
https://www.fpbattery.com/

DNK POWER COMPANY LIMITED

BATTERY SPECIFICATION

Part Number	DNK 504335
Nominal Voltage	3.7 V
Nominal Capacity	750 mAh
Internal Impedence	<60mΩ
Charge Voltage	4.2V
Recommended Charge Current	0.2 C
Allowed Max Charge Current	0.5 C
Output Voltage Range	4.2 - 2.5 V
Recommended Discharge Current	0.2 C
Max Continuous Discharge Current	1 C
Pulse Discharge Current	3 C (10 mS)
Discharge Cut-off Voltage	2.5± 0.05V
Cycle Life to 80% Health	500 (0.2C, 25°C)

1

1 YEAR WARRANTY

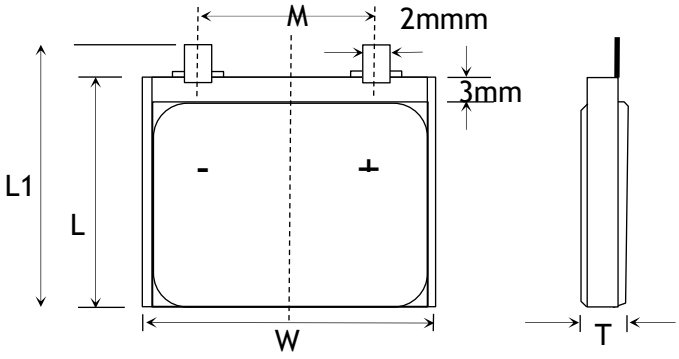

Item	Parameter (mm)
T	5
W	43
M	10
L	35
L_1	37
BL	37 ± 1
CL	100

ENVIRONMENTAL SPECIFICATIONS

Charging Temperature Range	0 - 45°C
Discharging Temperature Range	-20 - 60°C
Storage Period 1 Week	-20 - 45°C
Storage Period 1 Month	-10 - 45°C
Storage Period 6 Months	0 - 35°C

BATTERY PROTECTION

Over Charge	4.275 ± 50mV
Over Discharge	2.5V ± 50mV
Over Current	3A to 5A
Short Circuit	Yes

MECHANICAL SPECIFICATIONS

Dimensions	37x 43 x 5 mm(L*W*T)
Weight	Around 12 g
Battery Terminals	WC/ FL *

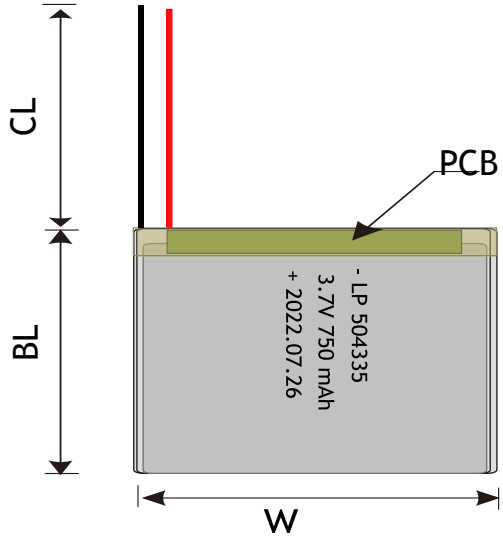

CERTIFICATION

Certification Approval	PLEASE CONSULT SALES

* WC=With Connector FL=Flying Leads UWP=Blue Wrapped PVC
BWP=Black Wrapped PVC BC= Bare Cell

Find More: https://www.fpbattery.com/3-7v-750mah-lithium-polymer-battery/

BULK PRODUCTION ACTUAL PICTURES



BARE CELL (BC)



FLYING LEADS (FL)



WITH CONNECTOR (WC)



BLUE WRAPPED PVC (UWP)



BLACK WRAPPED PVC (BWP)

3.7V LIPO BATTERY OPTIONS



Special Ingredients to make batteries work from -40 -85 ° C



Discharging Current up to 100C



Popular JST,Molex,Hirose,Anderson available



LED Power Indicator



Power Button



Upgrade to LifePo4 tech and life circle up to 1500

RELATIVE CURVES

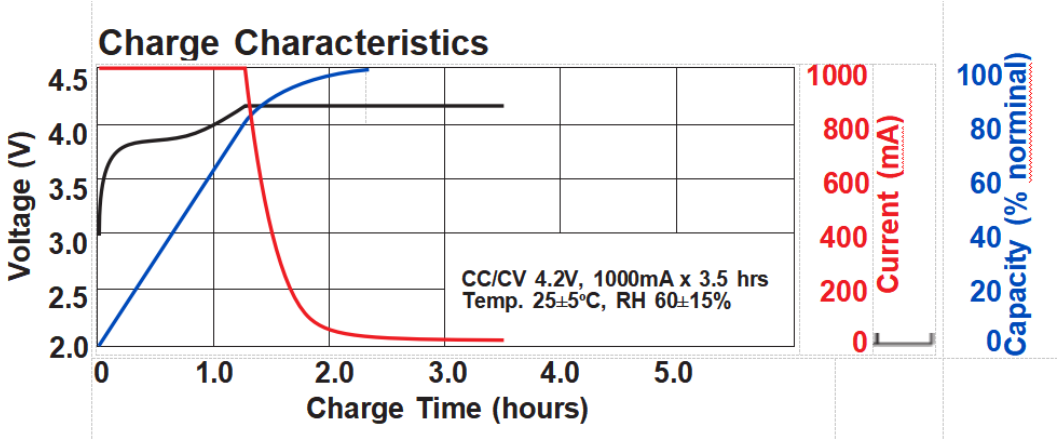

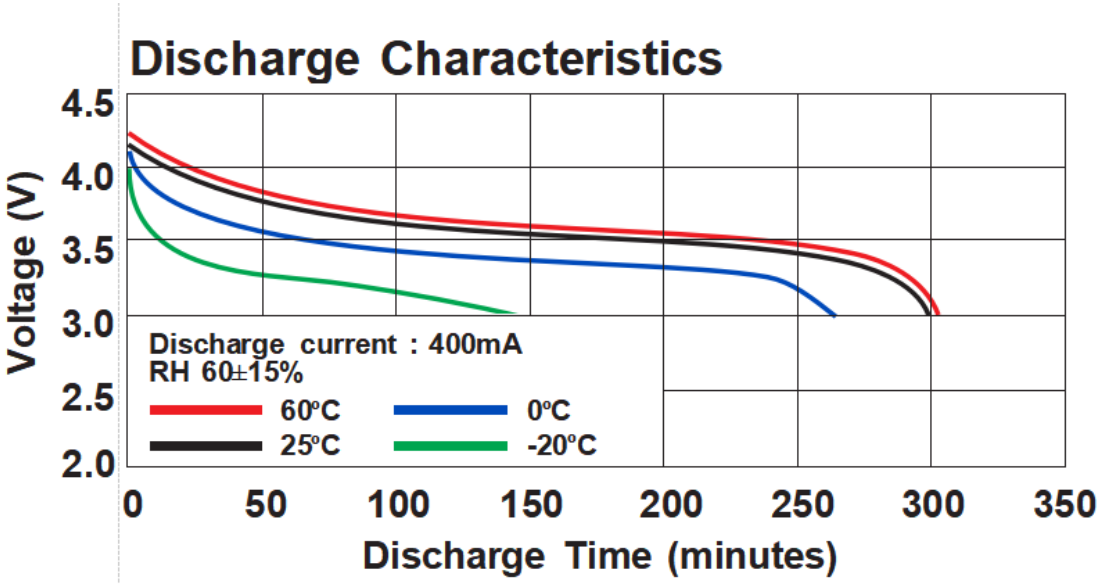

ANNOUNCEMENT

- Always guard against any possible short circuit.
- Do not inhale the gasses of a damaged battery or ingest the contents. If you do accidentally swallow the contents of LiPo cells seek medical attention immediately.
- A 1s or 1 cell LiPo battery has a nominal voltage of 3.7V. When fully charged it has a maximum voltage of 4.2V. When fully discharged, it should never go below 3.0V without risking cell damage.
- In general, most LiPo batteries should be charged to no more than 4.2 volts per cell or depleted to less than 3.0 volts per cell. There are new generation batteries available that can handle higher / lower voltages, but they are still new and thus are the exception to the rule.
- Security or other responsible staff on site who may be called to take action in an emergency should be made aware of the location of the charging area, the means for isolating the power and the action to take in an emergency.
- Before recycling your defective battery, it must be neutralized. Take a plastic container, fill it with water and add a lot of salt until the water becomes opaque. Place the LiPo battery in the water and leave for 24 hours. Check with a voltmeter that the voltage is 0.0V.
- Do not expose the battery to high temperatures to avoid overheating.
- Slow down the charging and discharging rate of the battery in low temperature environment.
- Keep Lipo batteries away from heal! And direct sunlight, and do not Store ma car during hot weather. Never use a Lipo that is leaking or gives off a strong odor, or has been damaged many way.

- NEVER attempt to extinguish this type of fire yourself – portable fire extinguishers have proven to be ineffective in extinguishing Li-Ion and LiPo battery fires.
- When not using your LiPo/Li-ion battery pack, store it at 60-70% of the pack's rated capacity. Lithium-ion cells should never be stored fully charged, it is suggested to store them with a voltage around 3.8V. Most of the chargers have a "storage mode" that will either charge or discharge the cell to the proper storage voltage. Experts recommend to put the cells in storage mode after every run, this will help the battery to lengthen the usable life span