3.7V Lithium Polymer Battery Data Sheet

Model: 453736

Please Find More:

https://www.fpbattery.com/3-7v-600mah-lithium-polymer-battery/

File Number: A/FP3736-1397

File Version: 01

CONTACT

CUSTOMER SERVICE
86.755.3682.7358
sales@fpbattery.com
Hours of Operation:
9:00am-6:00pm CST, Monday to Friday

LEARN MORE ON:
https://www.fpbattery.com/

DNK POWER COMPANY LIMITED

BATTERY SPECIFICATION

Part Number	DNK 453736
Nominal Voltage	3.7 V
Nominal Capacity	600 mAh
Internal Impedence	<60mΩ
Charge Voltage	4.2V
Recommended Charge Current	0.2 C
Allowed Max Charge Current	0.5 C
Output Voltage Range	4.2 - 2.5 V
Recommended Discharge Current	0.2 C
Max Continuous Discharge Current	1 C
Pulse Discharge Current	3 C (10 mS)
Discharge Cut-off Voltage	2.5± 0.05V
Cycle Life to 80% Health	500 (0.2C, 25°C)

1

1 YEAR WARRANTY

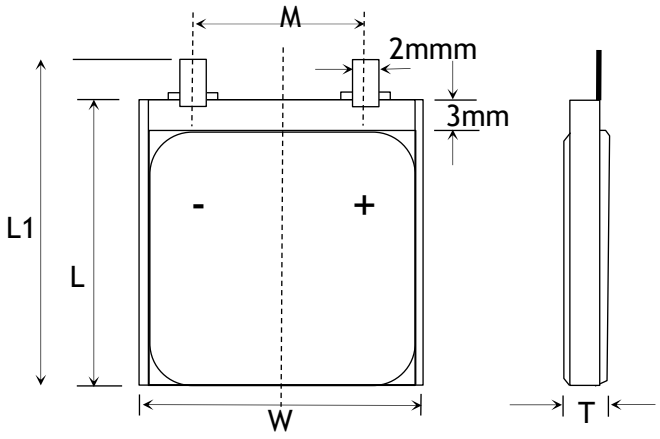

Item	Parameter (mm)
T	4
W	37
M	10
L	36
L_1	38
BL	38 ± 1
CL	100

ENVIRONMENTAL SPECIFICATIONS

Charging Temperature Range	0 - 45°C
Discharging Temperature Range	-20 - 60°C
Storage Period 1 Week	-20 - 45°C
Storage Period 1 Month	-10 - 45°C
Storage Period 6 Months	0 - 35°C

BATTERY PROTECTION

Over Charge	4.275 ± 50mV
Over Discharge	2.5V ± 50mV
Over Current	3A to 5A
Short Circuit	Yes

MECHANICAL SPECIFICATIONS

Dimensions	38x 37 x 4 mm(L*W*T)
Weight	Around 10 g
Battery Terminals	WC/ FL *

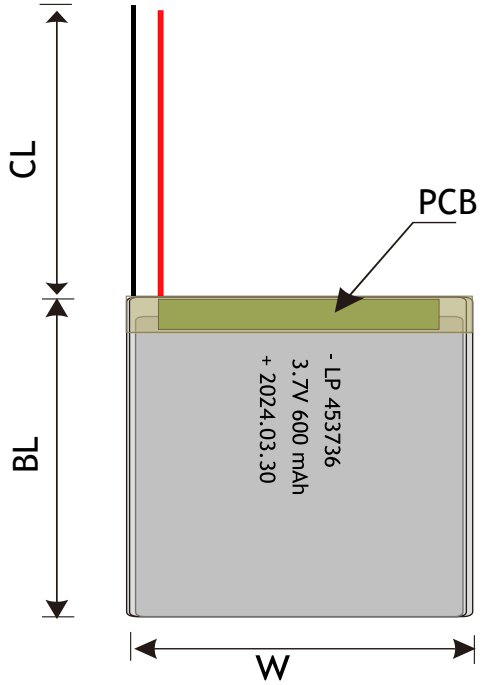

CERTIFICATION

Certification Approval	PLEASE CONSULT SALES

* WC=With Connector FL=Flying Leads UWP=Blue Wrapped PVC
BWP=Black Wrapped PVC BC= Bare Cell

BULK PRODUCTION ACTUAL PICTURES



BARE CELL (BC)



FLYING LEADS (FL)



WITH CONNECTOR (WC)



BLUE WRAPPED PVC (UWP)



BLACK WRAPPED PVC (BWP)

3.7V LIPO BATTERY OPTIONS



Special Ingredients to make batteries work from -40 -85 ° C



Discharging Current up to 100C



Popular JST,Molex,Hirose,Anderson available



LED Power Indicator



Power Button



Upgrade to LifePo4 tech and life circle up to 1500

RELATIVE CURVES

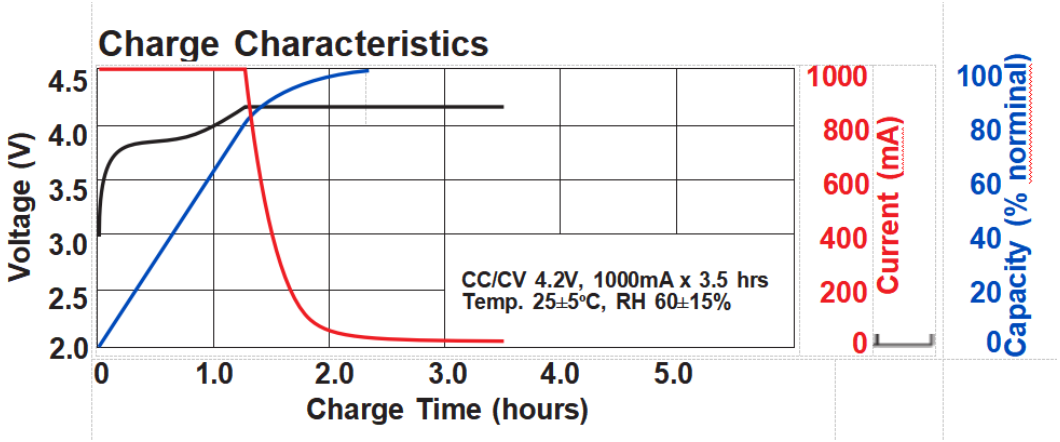

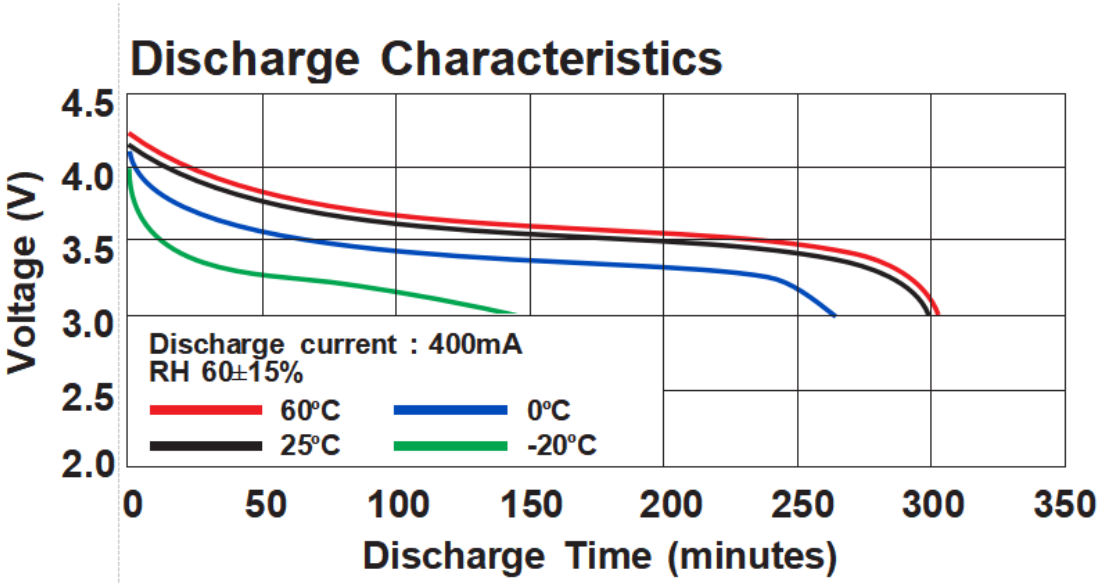

ANNOUNCEMENT

- Before starting work, inspect your battery for signs of damage prior to each use: bulging, hissing, leaking, or smoking. Do not use your battery if it displays any of these characteristics.
- If your skin or eyes come into contact with liquid from the battery, rinse thoroughly and notify a medical service for expert advice.
- Do not use the battery during charging to avoid overheating and safety accidents.
- If you start seeing any physical changes to the battery while discharging example puffing, STOP charging immediately and dispose of the battery responsibly.
- Obtain recycling container from EHRS for all batteries except LiPo.
- Never overcharge Batteries beyond the capacity listed on Batteries labels.
- Do not charge a Lipo battery mat has 'ballooned' or 'puffed up', or shows any signs of leakage or physical damage.
- Ensure that all cells in a battery maintain the same voltage across all cells at all times.
- Manually check the temperature of your LiPo battery pack constantly during charging. LiPo cells should never rise above ambient temperature when being charged.
- Before starting work, if applicable, understand one-hand working techniques.
- Avoid short-circuiting the battery. Though short-circuiting for short time will not damage the battery, doing so for a long time will damage the battery and may overheat the battery causing burns, fire or explosion.