3.7V Lithium Polymer Battery Data Sheet

Model: 453535

Please Find More:

https://www.fpbattery.com/3-7v-500mah-lithium-polymer-battery/

File Number: A/FP3535-2065

File Version: 01

CONTACT

CUSTOMER SERVICE
86.755.3682.7358
sales@fpbattery.com
Hours of Operation:
9:00am-6:00pm CST, Monday to Friday

LEARN MORE ON:
https://www.fpbattery.com/

DNK POWER COMPANY LIMITED

BATTERY SPECIFICATION

Part Number	DNK 453535
Nominal Voltage	3.7 V
Nominal Capacity	550 mAh
Internal Impedence	<60mΩ
Charge Voltage	4.2V
Recommended Charge Current	0.2 C
Allowed Max Charge Current	0.5 C
Output Voltage Range	4.2 - 2.5 V
Recommended Discharge Current	0.2 C
Max Continuous Discharge Current	1 C
Pulse Discharge Current	3 C (10 mS)
Discharge Cut-off Voltage	2.5± 0.05V
Cycle Life to 80% Health	500 (0.2C, 25°C)

1

1 YEAR WARRANTY

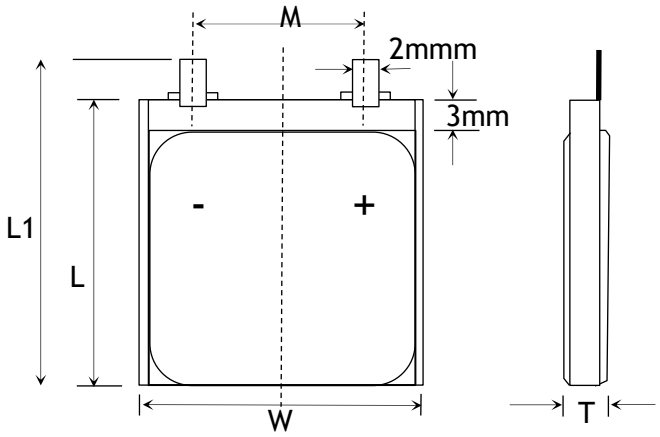

Item	Parameter (mm)
T	4
W	35
M	10
L	35
L_1	37
BL	37 ± 1
CL	100

ENVIRONMENTAL SPECIFICATIONS

Charging Temperature Range	0 - 45°C
Discharging Temperature Range	-20 - 60°C
Storage Period 1 Week	-20 - 45°C
Storage Period 1 Month	-10 - 45°C
Storage Period 6 Months	0 - 35°C

BATTERY PROTECTION

Over Charge	4.275 ± 50mV
Over Discharge	2.5V ± 50mV
Over Current	3A to 5A
Short Circuit	Yes

MECHANICAL SPECIFICATIONS

Dimensions	37x 35 x 4 mm(L*W*T)
Weight	Around 9 g
Battery Terminals	WC/ FL *

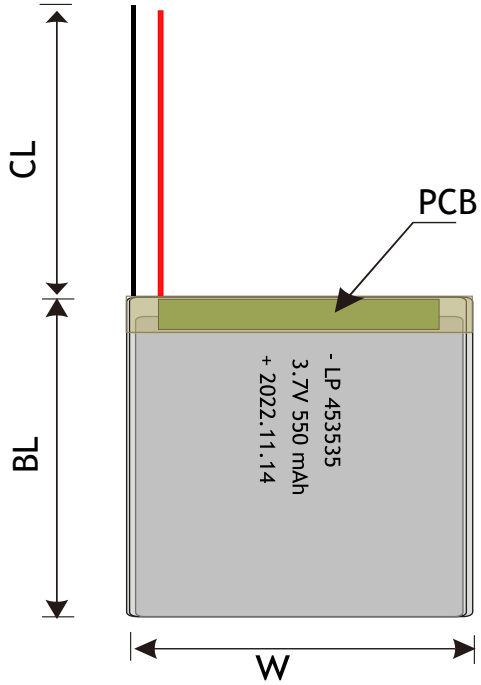

CERTIFICATION

Certification Approval	PLEASE CONSULT SALES

* WC=With Connector FL=Flying Leads UWP=Blue Wrapped PVC
BWP=Black Wrapped PVC BC= Bare Cell

RELATIVE CURVES

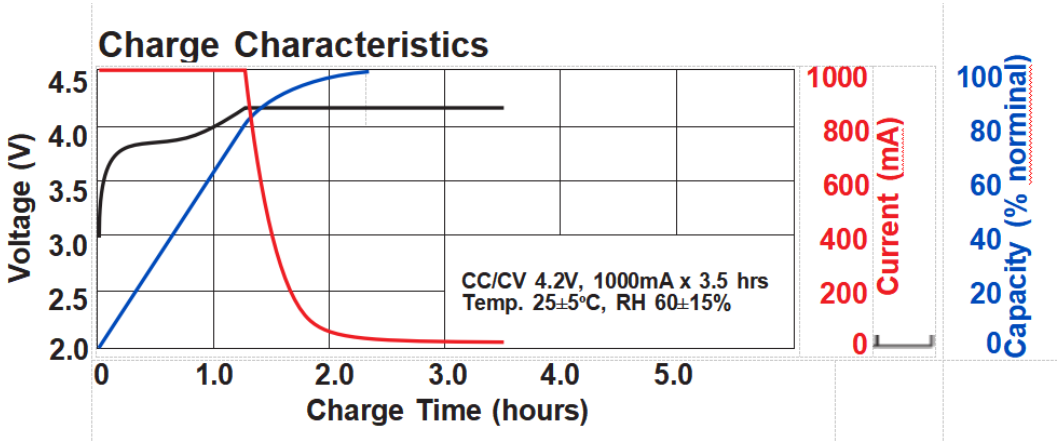

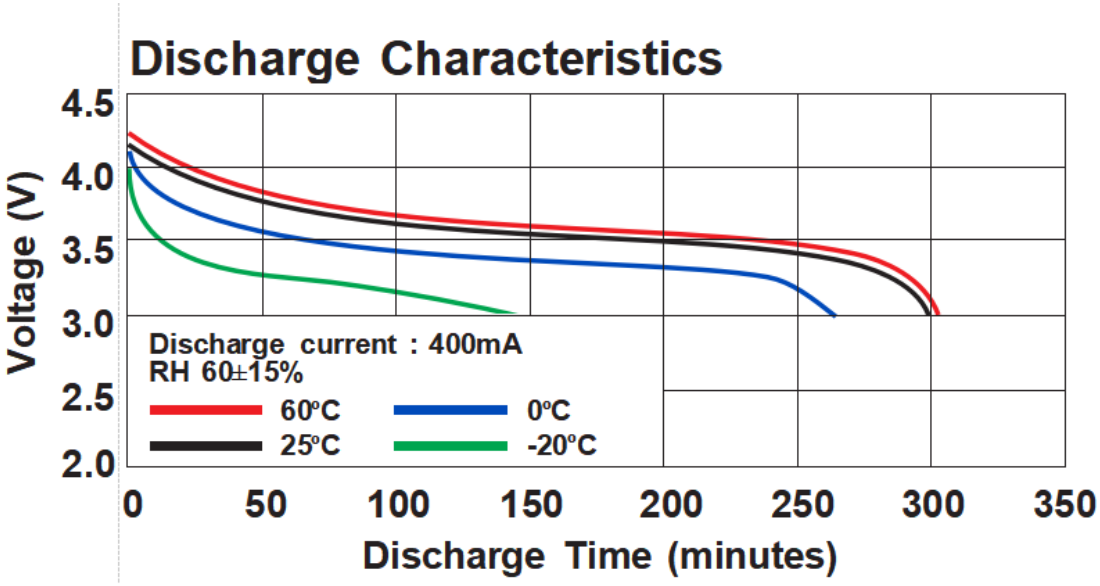

ANNOUNCEMENT

- Always use a balancer board to charge LiPo Battery with more than 1 cell.
- Over-charging LiPo batteries will damage them and possibly cause a fire. (above 4.20V per cell is considered overcharged).
- Use high quality battery connectors. Using connectors that do not fit tightly into the battery socket may result in overheating and melting of the battery case. Remove the connectors from the battery after EVERY use and during storage. Failure to do so will result in plug fatigue resulting in a bad connection and possible case melting. Replace connectors frequently to preserve good connections.
- A 1s or 1 cell LiPo battery has a nominal voltage of 3.7V. When fully charged it has a maximum voltage of 4.2V. When fully discharged, it should never go below 3.0V without risking cell damage.
- If you notice your LiPo battery pack is swelling while charging, stop the charging process immediately, put the battery in a safe non-flammable metal container and observe it.
- NEVER charge batteries at temperatures below 32℉ (0℃) or above 105℉ (40℃).
- Do not allow charging to continue above 4.20V per cell. This is VERY important as a fire could result.
- Ensure that all cells in a battery maintain the same voltage across all cells at all times.
- NEVER charge batteries at temperatures below 32℉ (0℃) or above 105℉ (40℃).
- Avoid using unauthorized charging devices.
- Do not mix different types of batteries or mix new and old ones together (e.g. in a power pack).