3.7V Lithium Polymer Battery Data Sheet

Model: 453434

Please Find More:

https://www.fpbattery.com/3-7v-500mah-lithium-polymer-battery/

File Number: A/FP3434-2077

File Version: 01

CONTACT

CUSTOMER SERVICE
86.755.3682.7358
sales@fpbattery.com
Hours of Operation:
9:00am-6:00pm CST, Monday to Friday

LEARN MORE ON:
https://www.fpbattery.com/

DNK POWER COMPANY LIMITED

BATTERY SPECIFICATION

Part Number	DNK 453434
Nominal Voltage	3.7 V
Nominal Capacity	520 mAh
Internal Impedence	<60mΩ
Charge Voltage	4.2V
Recommended Charge Current	0.2 C
Allowed Max Charge Current	0.5 C
Output Voltage Range	4.2 - 2.5 V
Recommended Discharge Current	0.2 C
Max Continuous Discharge Current	1 C
Pulse Discharge Current	3 C (10 mS)
Discharge Cut-off Voltage	2.5± 0.05V
Cycle Life to 80% Health	500 (0.2C, 25°C)

1

1 YEAR WARRANTY

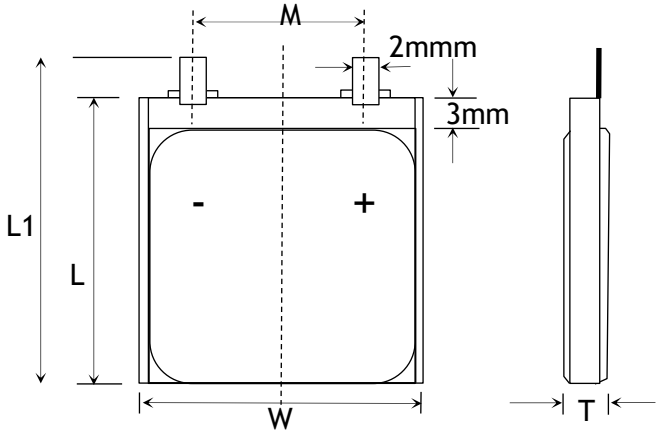

Item	Parameter (mm)
T	4
W	34
M	10
L	34
L_1	36
BL	36 ± 1
CL	100

ENVIRONMENTAL SPECIFICATIONS

Charging Temperature Range	0 - 45°C
Discharging Temperature Range	-20 - 60°C
Storage Period 1 Week	-20 - 45°C
Storage Period 1 Month	-10 - 45°C
Storage Period 6 Months	0 - 35°C

BATTERY PROTECTION

Over Charge	4.275 ± 50mV
Over Discharge	2.5V ± 50mV
Over Current	3A to 5A
Short Circuit	Yes

MECHANICAL SPECIFICATIONS

Dimensions	36x 34 x 4 mm(L*W*T)
Weight	Around 8 g
Battery Terminals	WC/ FL *

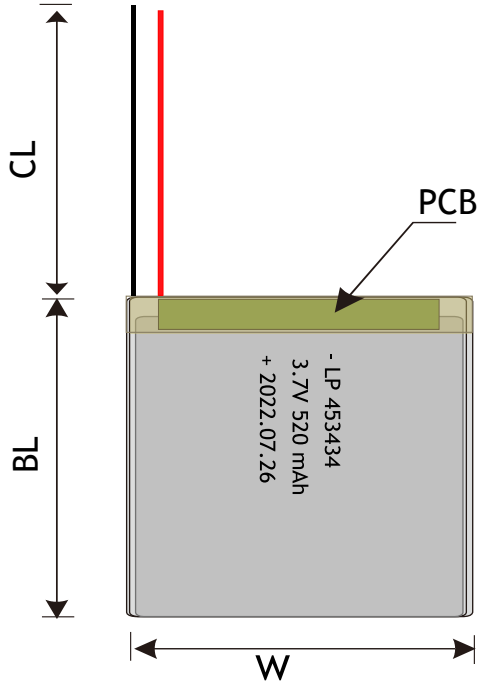

CERTIFICATION

Certification Approval	PLEASE CONSULT SALES

* WC=With Connector FL=Flying Leads UWP=Blue Wrapped PVC
BWP=Black Wrapped PVC BC= Bare Cell

RELATIVE CURVES

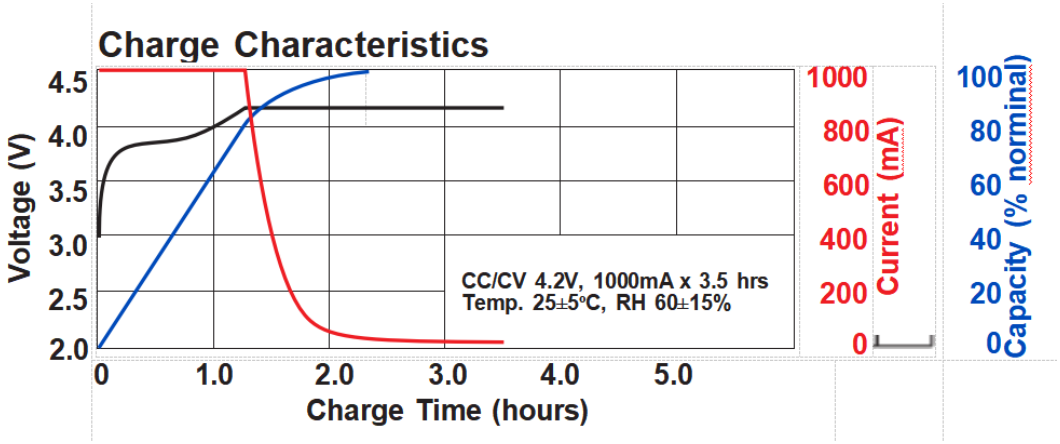

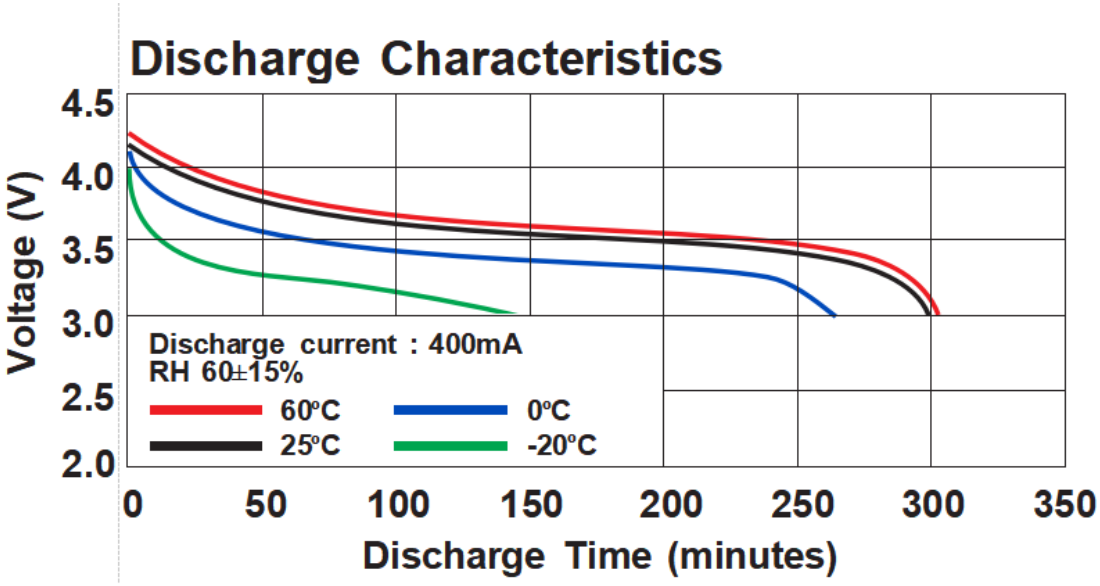

ANNOUNCEMENT

- NEVER attempt to charge a one-time-use (non-rechargeable) Li-Ion or LiPo battery.
- Avoid bumping or dropping the battery to prevent damage or internal short circuit.
- Avoid physical damage and short circuiting.
- NEVER continue to charge a device or a battery after it is fully charged, unless the manufacturer’s instructions for the charger and the battery specifically state that it is allowed.
- Do not overcharge the battery and observe the charger and battery charge time instructions.
- NEVER continue to charge a device or a battery after it is fully charged, unless the manufacturer’s instructions for the charger and the battery specifically state that it is allowed.
- Discharge Lipo Battery at Environmental temperature : -20˚C~60˚C.
- Test equipment for short circuits prior to installing batteries.
- Do not approach the cell until it reaches room temperature. The cell temperature can be checked using a remote device (i.e. infrared thermometer).
- Always remove your LiPo battery from your model while charging. Remove the battery from you model and allow it to cool to ambient temperature before re-charging.
- Connecting the LiPo Battery to the Charger (Read the Charger Instructions)