# 3.7V Lithium Polymer Battery Data Sheet

Model:  408748

Please Find More:

https://www.fpbattery.com/3-7v-1700mah-lithium-polymer-battery/

File Number:  A/FP8748-30

File Version: 01


CONTACT

CUSTOMER SERVICE
86.755.3682.7358
sales@fpbattery.com
Hours of Operation:
9:00am-6:00pm CST, Monday to Friday

LEARN MORE ON:
https://www.fpbattery.com/

DNK POWER COMPANY LIMITED

## BATTERY SPECIFICATION

| | |
|---|---|
| Part Number | DNK 408748 |
| Nominal Voltage | 3.7 V |
| Nominal Capacity | 1700 mAh |
| Internal Impedence | <60mΩ |
| Charge Voltage | 4.2V |
| Recommended Charge Current | 0.2 C |
| Allowed Max Charge Current | 0.5 C |
| Output Voltage Range | 4.2 - 2.5 V |
| Recommended Discharge Current | 0.2 C |
| Max Continuous Discharge Current | 1 C |
| Pulse Discharge Current | 3 C (10 mS) |
| Discharge Cut-off Voltage | 2.5± 0.05V |
| Cycle Life to 80% Health | 500 (0.2C, 25°C) |

1

**1 YEAR WARRANTY**

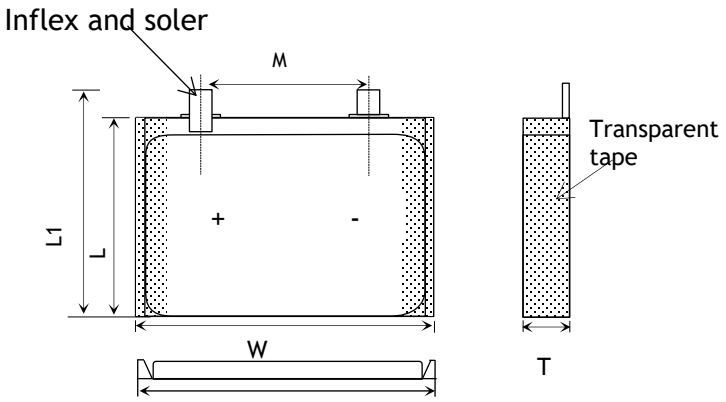


| Item | Parameter (mm) |
|---|---|
| T | 4 |
| W | 87 |
| M | 10 |
| L | 48 |
| $L_1$ | 50 |
| BL | 50 ± 1 |
| CL | 100 |

## ENVIRONMENTAL SPECIFICATIONS

| | |
|---|---|
| Charging Temperature Range | 0 - 45°C |
| Discharging Temperature Range | -20 - 60°C |
| Storage Period 1 Week | -20 - 45°C |
| Storage Period 1 Month | -10 - 45°C |
| Storage Period 6 Months | 0 - 35°C |

## BATTERY PROTECTION

| | |
|---|---|
| Over Charge | 4.275 ± 50mV |
| Over Discharge | 2.5V ± 50mV |
| Over Current | 3A to 5A |
| Short Circuit | Yes |

## MECHANICAL SPECIFICATIONS

| | |
|---|---|
| Dimensions | 50x 87 x 4 mm(L*W*T) |
| Weight | Around 28 g |
| Battery Terminals | WC/ FL * |

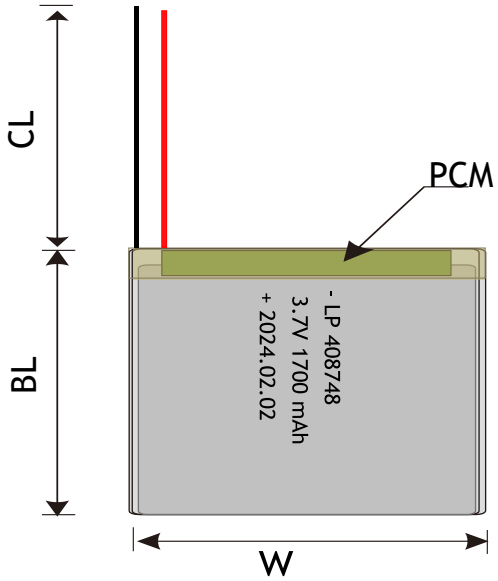


## CERTIFICATION

| | |
|---|---|
| Certification Approval | PLEASE CONSULT SALES |

* WC=With Connector FL=Flying Leads UWP=Blue Wrapped PVC BWP=Black Wrapped PVC BC= Bare Cell

# RELATIVE CURVES

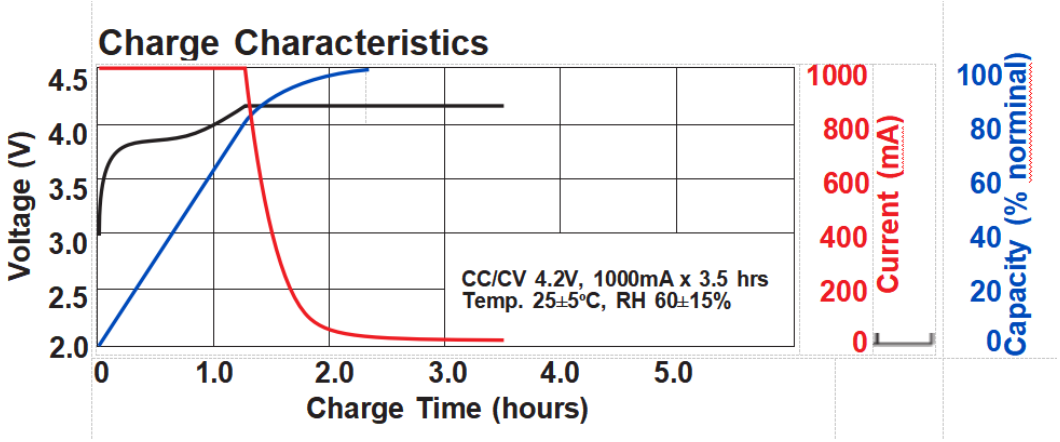


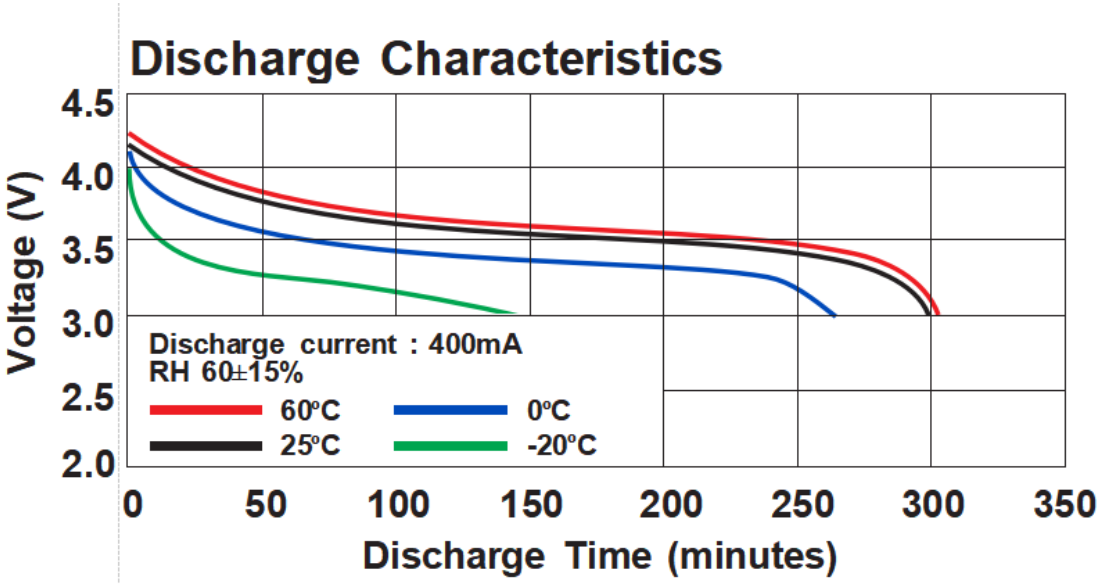


# ANNOUNCEMENT

- Avoid crushing or excessive pressure on the battery.
- If your skin or eyes come into contact with liquid from the battery, rinse thoroughly and notify a medical service for expert advice.
- Before starting work, if you are designing wearables using lithium-ion batteries, make sure they are easily removeable if they start to react while being worn.
- Use high quality battery connectors. Using connectors that do not fit tightly into the battery socket may result in overheating and melting of the battery case. Remove the connectors from the battery after EVERY use and during storage. Failure to do so will result in plug fatigue resulting in a bad connection and possible case melting. Replace connectors frequently to preserve good connections.
- DO NOT make or build your own charging circuit.
- NEVER leave your LiPo battery unattended while charging.
- LiPo safe bags help contain heat and flames that results if a Li-Ion battery combusts during charging or while in storage.
- In general, most LiPo batteries should be charged to no more than 4.2 volts per cell or depleted to less than 3.0 volts per cell. There are new generation batteries available that can handle higher / lower voltages, but they are still new and thus are the exception to the rule.
- If the battery swells during charging, stop charging immediately and disconnect the battery from the charger. Leave the battery outside for a few hours and observe.
- Never charge a battery that shows signs of puffing.
- Prevent arcing by turning the charger off before disconnecting the battery.