3.7V Lithium Polymer Battery Data Sheet

Model: 406461

Please Find More:

https://www.fpbattery.com/3-7v-1600mah-lithium-polymer-battery/

File Number: A/FP6461-1169

File Version: 01

CONTACT

CUSTOMER SERVICE
86.755.3682.7358
sales@fpbattery.com
Hours of Operation:
9:00am-6:00pm CST, Monday to Friday

LEARN MORE ON:
https://www.fpbattery.com/

DNK POWER COMPANY LIMITED

BATTERY SPECIFICATION

Part Number	DNK 406461
Nominal Voltage	3.7 V
Nominal Capacity	1600 mAh
Internal Impedence	<60mΩ
Charge Voltage	4.2V
Recommended Charge Current	0.2 C
Allowed Max Charge Current	0.5 C
Output Voltage Range	4.2 - 2.5 V
Recommended Discharge Current	0.2 C
Max Continuous Discharge Current	1 C
Pulse Discharge Current	3 C (10 mS)
Discharge Cut-off Voltage	2.5± 0.05V
Cycle Life to 80% Health	500 (0.2C, 25°C)

1

1 YEAR WARRANTY

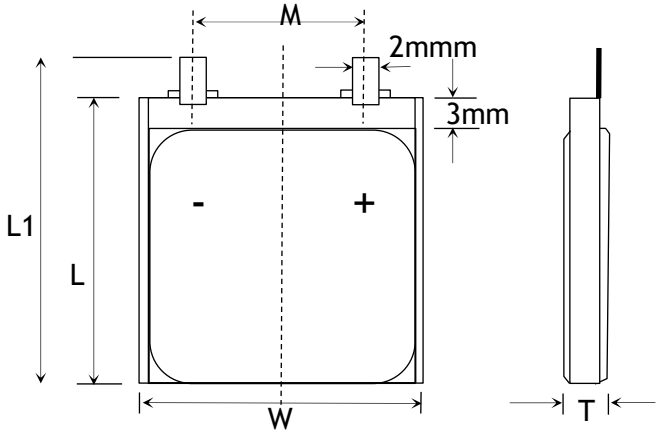

Item	Parameter (mm)
T	4
W	64
M	10
L	61
L_1	63
BL	63 ± 1
CL	100

ENVIRONMENTAL SPECIFICATIONS

Charging Temperature Range	0 - 45°C
Discharging Temperature Range	-20 - 60°C
Storage Period 1 Week	-20 - 45°C
Storage Period 1 Month	-10 - 45°C
Storage Period 6 Months	0 - 35°C

BATTERY PROTECTION

Over Charge	4.275 ± 50mV
Over Discharge	2.5V ± 50mV
Over Current	3A to 5A
Short Circuit	Yes

MECHANICAL SPECIFICATIONS

Dimensions	63x 64 x 4 mm(L*W*T)
Weight	Around 26 g
Battery Terminals	WC/ FL *

CERTIFICATION

Certification Approval	PLEASE CONSULT SALES

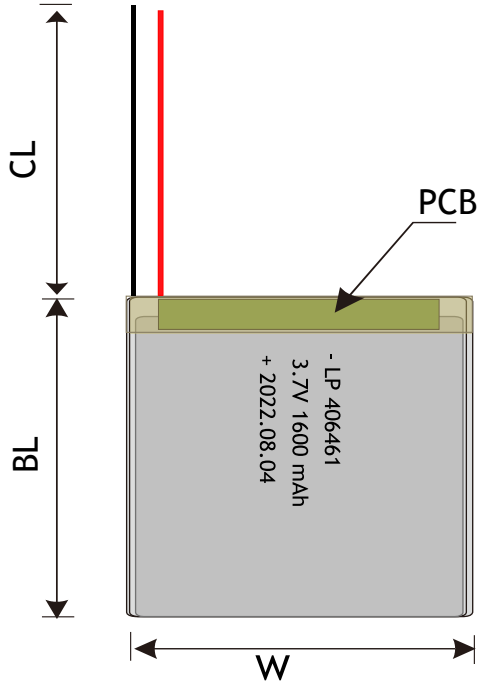

* WC=With Connector FL=Flying Leads UWP=Blue Wrapped PVC
BWP=Black Wrapped PVC BC= Bare Cell

BULK PRODUCTION ACTUAL PICTURES



BARE CELL (BC)



FLYING LEADS (FL)



WITH CONNECTOR (WC)



BLUE WRAPPED PVC (UWP)



BLACK WRAPPED PVC (BWP)

3.7V LIPO BATTERY OPTIONS



Special Ingredients to make batteries work from -40 -85 ° C



Discharging Current up to 100C



Popular JST,Molex,Hirose,Anderson available



LED Power Indicator



Power Button



Upgrade to LifePo4 tech and life circle up to 1500

RELATIVE CURVES

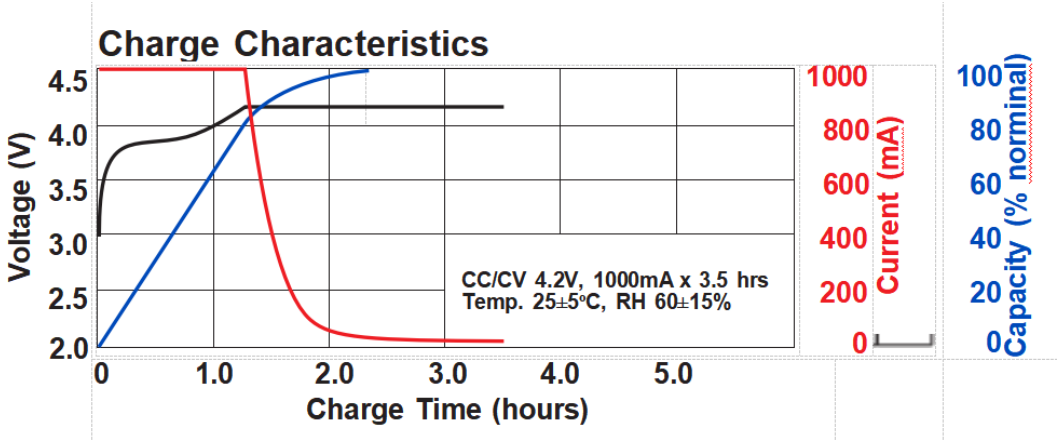

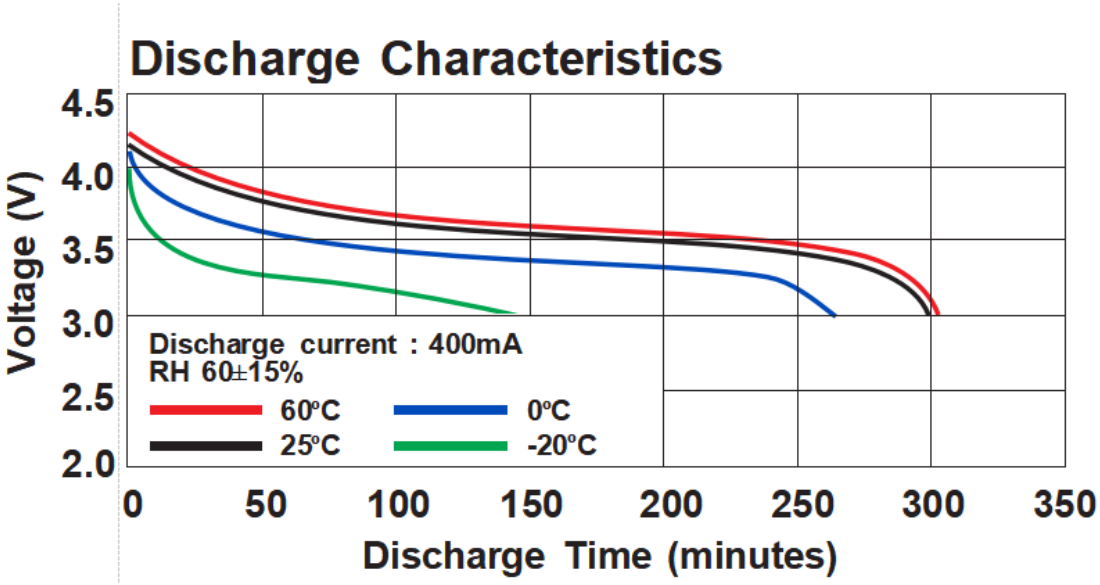

ANNOUNCEMENT

- If the battery develops an abnormal condition, stop using it immediately.
- Regularly check the condition of the battery. Do not use if damaged or swollen
- Do not mix batteries of different models or capacities.
- Always inspect batteries for any signs of damage before use, check for physical damage such as cracks/bulges/indentations . Any battery that has been damaged, dented or pierced should be taken out of service immediately, segregated from other batteries and stored as set out below while awaiting safe disposal. Similarly, damaged goods containing batteries should also be segregated from other material and stored safely to await safe disposal.
- Avoid passive or active short-circuiting of the battery.
- Avoid short-circuiting the battery. Though short-circuiting for short time will not damage the battery, doing so for a long time will damage the battery and may overheat the battery causing burns, fire or explosion.
- Do not discharge the battery at a higher current than the maximum continuous discharging current. A higher discharging current may cause overheating which will lead to ballooning, swelling, or possibly result in fire. For example, a 5000mAh battery with a designed maximum 35C discharge current must not have a continuous discharge rate or load of more than 175 Amps. For longer cycle life, a continuous discharging current of 70%-80% of the designed maximum discharging current is acceptable and recommended.
- Contact EHRS if LiPo battery packs are to be fabricated in-house.
- Do not short-circuit the battery.

- Use a reliable power adapter to avoid unstable current output.
- Do not immerse the battery in water or expose it to moisture.