3.7V Lithium Polymer Battery Data Sheet

Model: 405251

Please Find More:

https://www.fpbattery.com/3-7v-1000mah-lithium-polymer-battery/

File Number: A/FP5251-1575

File Version: 01

CONTACT

CUSTOMER SERVICE
86.755.3682.7358
sales@fpbattery.com
Hours of Operation:
9:00am-6:00pm CST, Monday to Friday

LEARN MORE ON:
https://www.fpbattery.com/

DNK POWER COMPANY LIMITED

BATTERY SPECIFICATION

Part Number	DNK 405251
Nominal Voltage	3.7 V
Nominal Capacity	1060 mAh
Internal Impedence	<60mΩ
Charge Voltage	4.2V
Recommended Charge Current	0.2 C
Allowed Max Charge Current	0.5 C
Output Voltage Range	4.2 - 2.5 V
Recommended Discharge Current	0.2 C
Max Continuous Discharge Current	1 C
Pulse Discharge Current	3 C (10 mS)
Discharge Cut-off Voltage	2.5± 0.05V
Cycle Life to 80% Health	500 (0.2C, 25°C)

1

1 YEAR WARRANTY

Inflex and soler

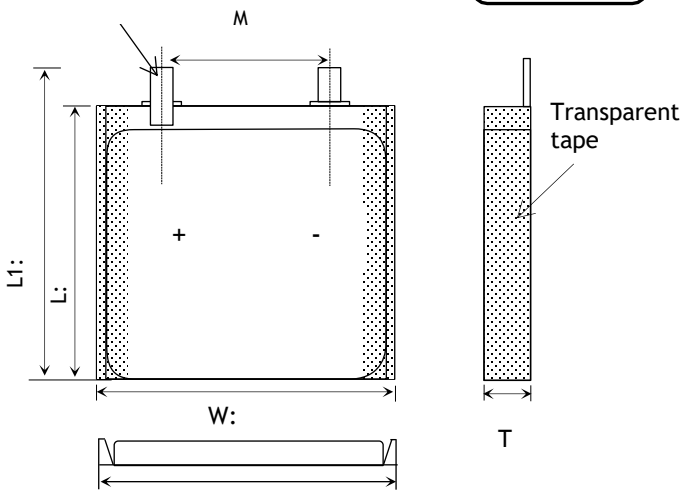

Item	Parameter (mm)
T	4
W	52
M	10
L	51
L_1	53
BL	53 ± 1
CL	100

ENVIRONMENTAL SPECIFICATIONS

Charging Temperature Range	0 - 45°C
Discharging Temperature Range	-20 - 60°C
Storage Period 1 Week	-20 - 45°C
Storage Period 1 Month	-10 - 45°C
Storage Period 6 Months	0 - 35°C

BATTERY PROTECTION

Over Charge	4.275 ± 50mV
Over Discharge	2.5V ± 50mV
Over Current	3A to 5A
Short Circuit	Yes

MECHANICAL SPECIFICATIONS

Dimensions	53x 52 x 4 mm(L*W*T)
Weight	Around 17 g
Battery Terminals	WC/ FL *

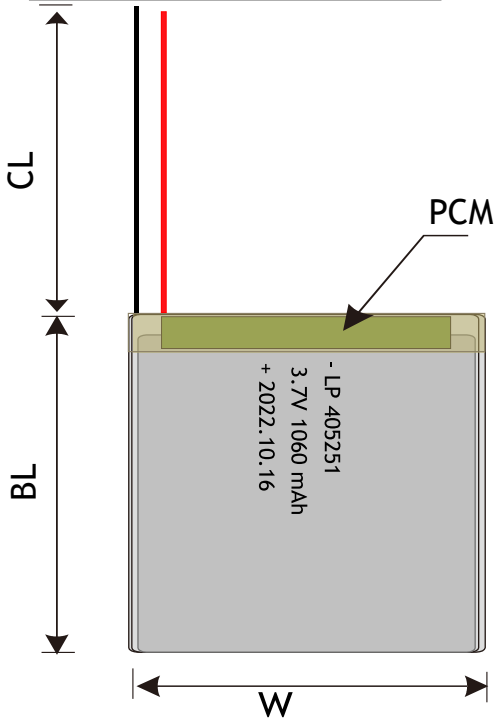

CERTIFICATION

Certification Approval	PLEASE CONSULT SALES

* WC=With Connector FL=Flying Leads UWP=Blue Wrapped PVC BWP=Black Wrapped PVC BC= Bare Cell

RELATIVE CURVES

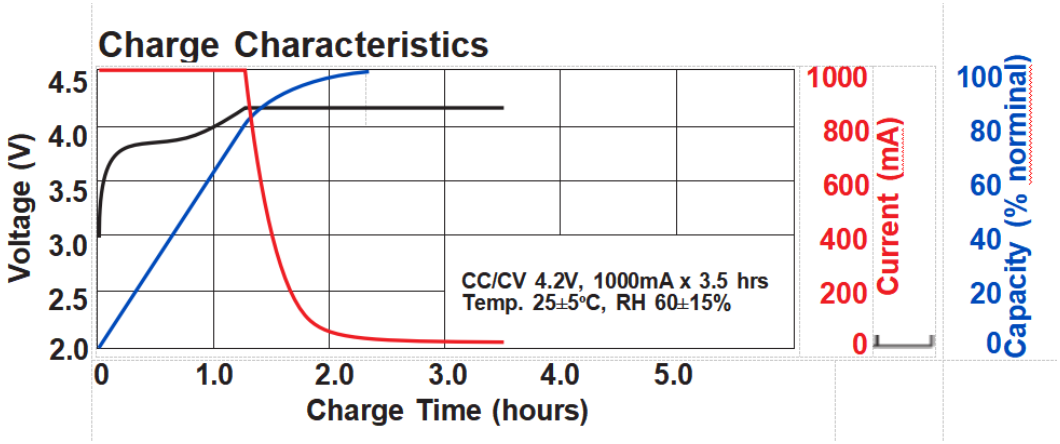

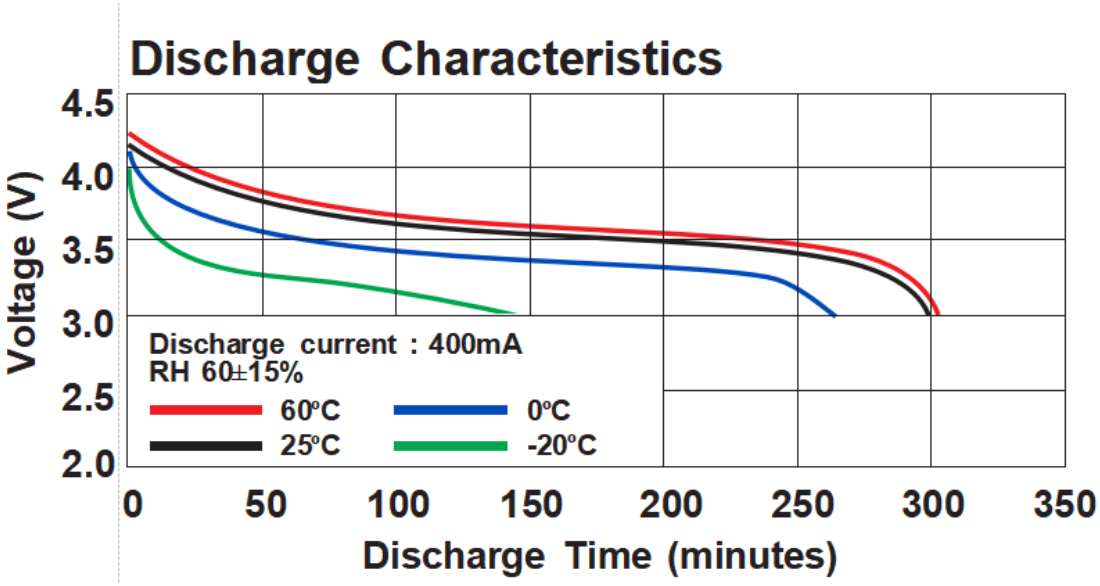

ANNOUNCEMENT

- Use low voltage cutoff switch or monitor battery voltage while in use on equipment. Do not allow voltage to drop below 3.0 volts.
- Do not expose LiPo batteries to direct sunlight or leave in a hot environment (inside an automobile in hot weather) for extended periods of time.
- DO NOT make or build your own charging circuit.
- Do not allow the battery to come into common contact with metal to prevent a short circuit.
- Never charge a damaged or inflated battery.
- Use lithium battery safety bags/containers during charging.
- Do not attempt to disassemble or repair the battery.
- Avoid crushing or excessive pressure on the battery.
- For systems with multiple batteries, make sure each battery is of the same type and capacity.
- Only charge LiPo batteries with chargers specifically designed to charge LiPo batteries. NEVER use a NiMH or NiCd charger! Failure to use a proper charger might cause a fire resulting in personal injury and/or property damage. Some LiPo chargers on the market may have technical deficiencies which may result in incorrect charging or charging at an improper rate. It is your responsibility to determine that your charger works properly.
- Before starting work, if applicable, understand one-hand working techniques.