3.7V Lithium Polymer Battery Data Sheet

Model: 358157

Please Find More:

https://www.fpbattery.com/3-7v-1600mah-lithium-polymer-battery/

File Number: A/FP8157-111

File Version: 01

CONTACT

CUSTOMER SERVICE
86.755.3682.7358
sales@fpbattery.com
Hours of Operation:
9:00am-6:00pm CST, Monday to Friday

LEARN MORE ON:
https://www.fpbattery.com/

DNK POWER COMPANY LIMITED

BATTERY SPECIFICATION

Part Number	DNK 358157
Nominal Voltage	3.7 V
Nominal Capacity	1600 mAh
Internal Impedence	<60mΩ
Charge Voltage	4.2V
Recommended Charge Current	0.2 C
Allowed Max Charge Current	0.5 C
Output Voltage Range	4.2 - 2.5 V
Recommended Discharge Current	0.2 C
Max Continuous Discharge Current	1 C
Pulse Discharge Current	3 C (10 mS)
Discharge Cut-off Voltage	2.5± 0.05V
Cycle Life to 80% Health	500 (0.2C, 25°C)

1 YEAR WARRANTY

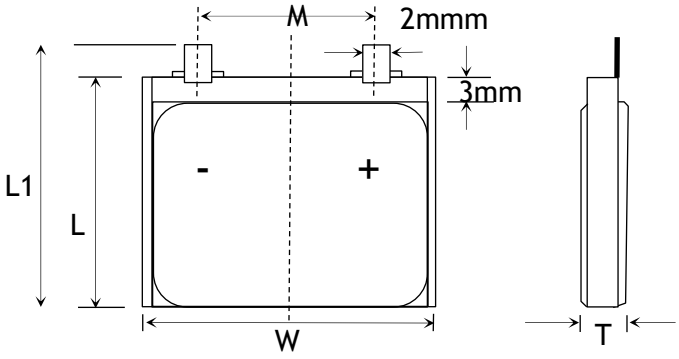

Item	Parameter (mm)
T	3
W	81
M	10
L	57
L_1	59
BL	59 ± 1
CL	100

ENVIRONMENTAL SPECIFICATIONS

Charging Temperature Range	0 - 45°C
Discharging Temperature Range	-20 - 60°C
Storage Period 1 Week	-20 - 45°C
Storage Period 1 Month	-10 - 45°C
Storage Period 6 Months	0 - 35°C

BATTERY PROTECTION

Over Charge	4.275 ± 50mV
Over Discharge	2.5V ± 50mV
Over Current	3A to 5A
Short Circuit	Yes

MECHANICAL SPECIFICATIONS

Dimensions	59x 81 x 3 mm(L*W*T)
Weight	Around 26 g
Battery Terminals	WC/ FL *

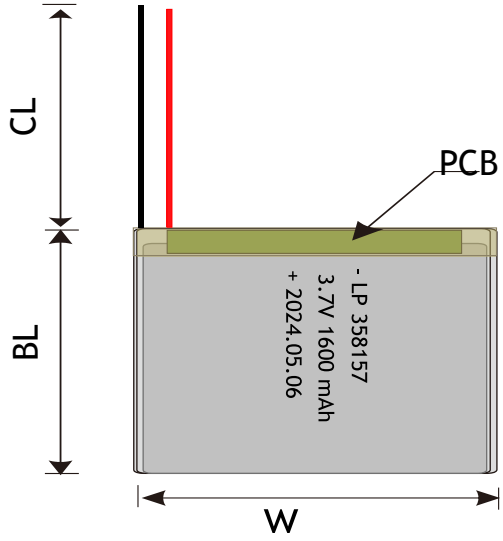

CERTIFICATION

Certification Approval	PLEASE CONSULT SALES

* WC=With Connector FL=Flying Leads UWP=Blue Wrapped PVC
BWP=Black Wrapped PVC BC= Bare Cell

Find More: https://www.fpbattery.com/3-7v-1600mah-lithium-polymer-battery/

RELATIVE CURVES

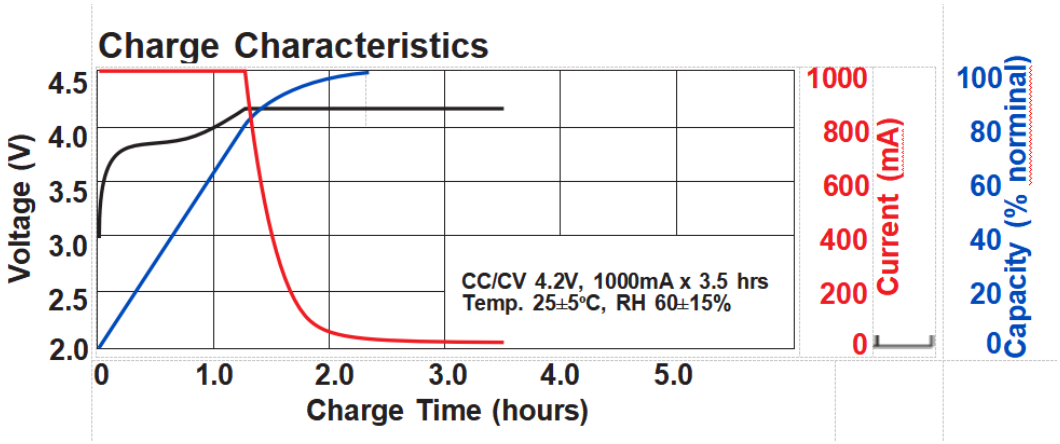

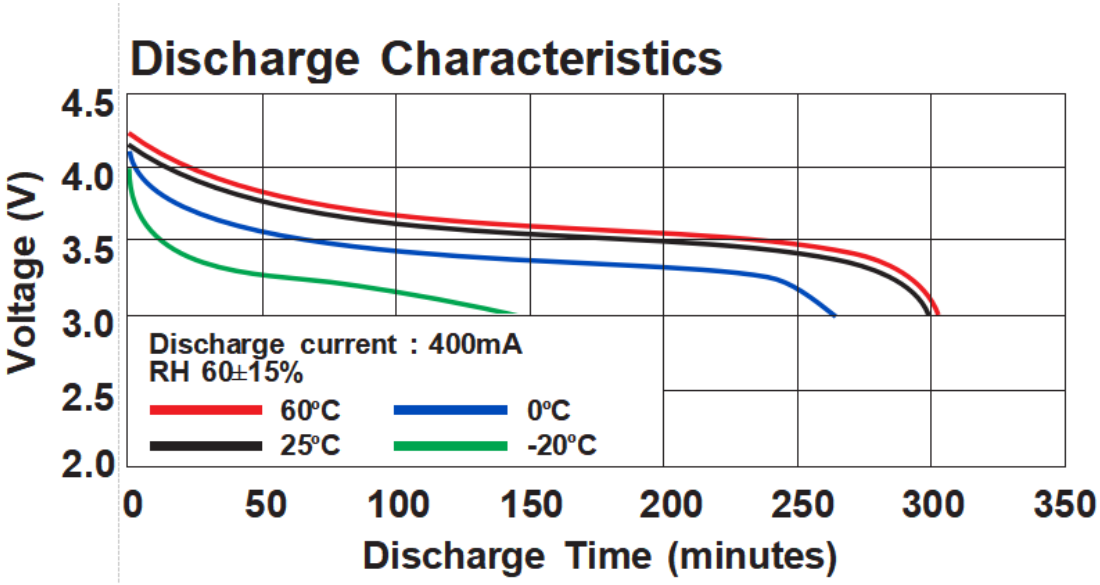

ANNOUNCEMENT

- Do not over-discharge (3.2V per cell)
- Avoid placing the battery in a damp environment.
- Do not expose the battery to direct sunlight for extended periods of time.
- Do not store or use the battery with objects that could cause a short circuit such as coins, metal objects etc.
- Never charge a battery that is still warm after usage, and never use a battery that is still warm from charging.
- Exercise caution with new products like E-Scooters where all safety considerations may not be recognized or that may encourage cheap knock-offs built without adherent to safety standards.
- Avoid restarting the device frequently on the way to using the battery.
- NEVER charge batteries at temperatures below 32℉ (0℃) or above 105℉ (40℃).
- Avoid frequent charging and discharging on the way to using the battery.
- Always follow the manufacturer’s safety instructions
- Maintain safe distances (up to 5m from flammable materials)