3.7V Lithium Polymer Battery Data Sheet

Model: 356258

Please Find More:

https://www.fpbattery.com/3-7v-1300mah-lithium-polymer-battery/

File Number: A/FP6258-977

File Version: 01

CONTACT

CUSTOMER SERVICE
86.755.3682.7358
sales@fpbattery.com
Hours of Operation:
9:00am-6:00pm CST, Monday to Friday

LEARN MORE ON:
https://www.fpbattery.com/

DNK POWER COMPANY LIMITED

BATTERY SPECIFICATION

Part Number	DNK 356258
Nominal Voltage	3.7 V
Nominal Capacity	1300 mAh
Internal Impedence	<60mΩ
Charge Voltage	4.2V
Recommended Charge Current	0.2 C
Allowed Max Charge Current	0.5 C
Output Voltage Range	4.2 - 2.5 V
Recommended Discharge Current	0.2 C
Max Continuous Discharge Current	1 C
Pulse Discharge Current	3 C (10 mS)
Discharge Cut-off Voltage	2.5± 0.05V
Cycle Life to 80% Health	500 (0.2C, 25°C)

1 YEAR WARRANTY

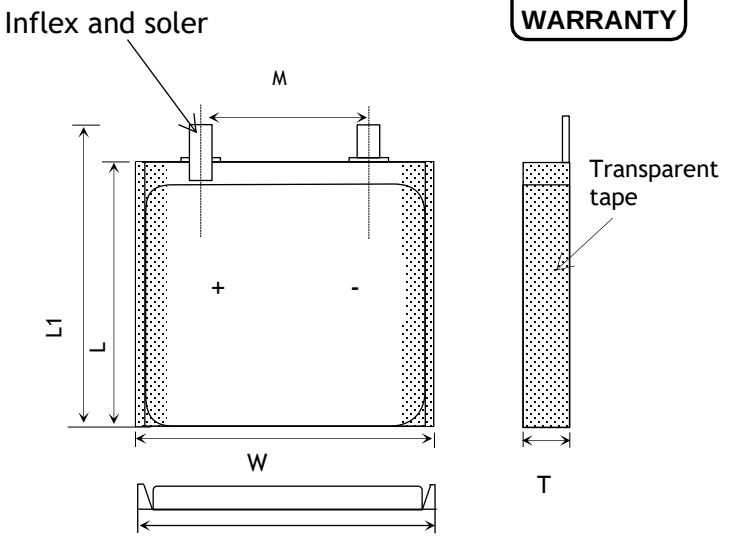

Item	Parameter (mm)
T	3
W	62
M	10
L	58
L_1	60
BL	60 ± 1
CL	100

ENVIRONMENTAL SPECIFICATIONS

Charging Temperature Range	0 - 45°C
Discharging Temperature Range	-20 - 60°C
Storage Period 1 Week	-20 - 45°C
Storage Period 1 Month	-10 - 45°C
Storage Period 6 Months	0 - 35°C

BATTERY PROTECTION

Over Charge	4.275 ± 50mV
Over Discharge	2.5V ± 50mV
Over Current	3A to 5A
Short Circuit	Yes

MECHANICAL SPECIFICATIONS

Dimensions	60x 62 x 3 mm(L*W*T)
Weight	Around 21 g
Battery Terminals	WC/ FL *

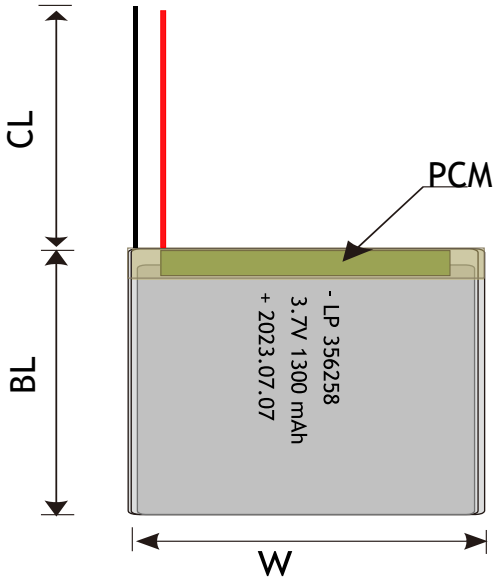

CERTIFICATION

Certification Approval	PLEASE CONSULT SALES

* WC=With Connector FL=Flying Leads UWP=Blue Wrapped PVC BWP=Black Wrapped PVC BC= Bare Cell

BULK PRODUCTION ACTUAL PICTURES



BARE CELL (BC)



FLYING LEADS (FL)



WITH CONNECTOR (WC)



BLUE WRAPPED PVC (UWP)



BLACK WRAPPED PVC (BWP)

3.7V LIPO BATTERY OPTIONS



Special Ingredients to make batteries work from -40 -85 ° C



Discharging Current up to 100C



Popular JST,Molex,Hirose,Anderson available



LED Power Indicator



Power Button



Upgrade to LifePo4 tech and life circle up to 1500

RELATIVE CURVES

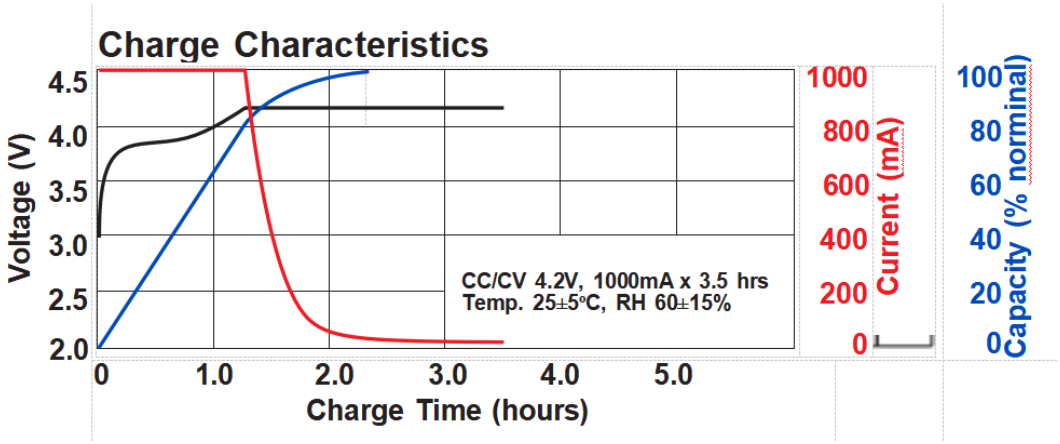

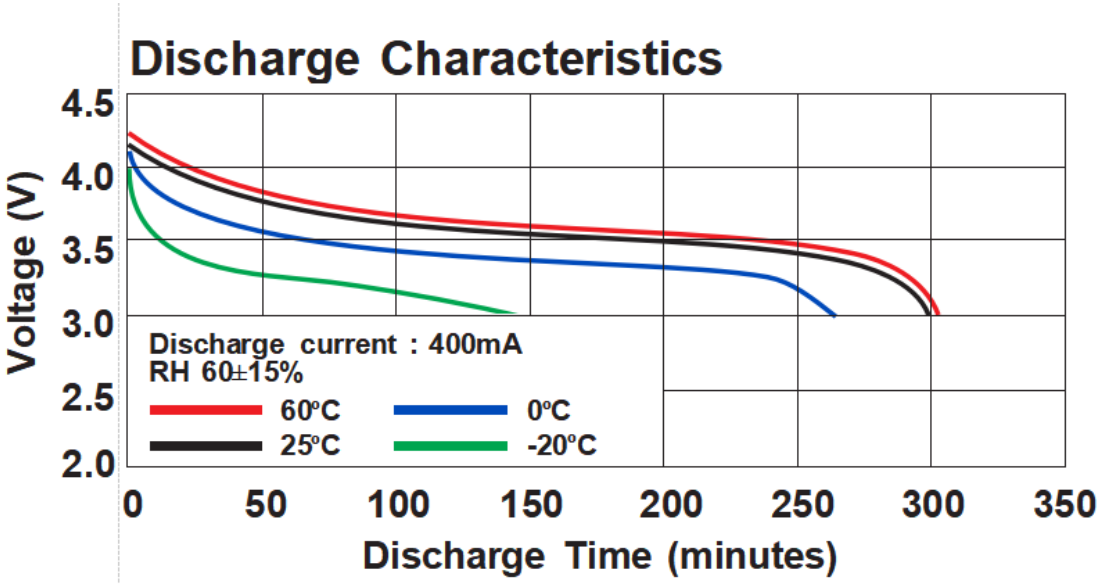

ANNOUNCEMENT

- Always check the voltage of Batteries before each charge session in order to ensure they are at or above the minimum safe starting voltage. If starting voltage is below recommended levels than Batteries have been over discharged or have experienced a failure and should NOT be charged
- Read and understand the battery's instruction manual carefully before use.
- Check the voltage of the pack or cells before charging. Do not attempt to charge any pack if the open voltage is lower than the Lowest Open Voltage. Check the voltage of each cell before charging via the balance connector. If the voltage of any cell is less than 3.0V/cell, remove it from service, and dispose of it properly.
- Do not crush or bend the battery.
- Only charge LiPo batteries with chargers specifically designed to charge LiPo batteries. NEVER use a NiMH or NiCd charger! Failure to use a proper charger might cause a fire resulting in personal injury and/or property damage. Some LiPo chargers on the market may have technical deficiencies which may result in incorrect charging or charging at an improper rate. It is your responsibility to determine that your charger works properly.
- Do not use unsuitable battery cover materials.
- Never expose Batteries to extreme temperatures or direct sunlight. The temperature range must be between 40-120° F (4-49° C).
- Always remove your LiPo battery from your model while charging. Remove the battery from you model and allow it to cool to ambient temperature before re-charging.
- Do not expose LiPo batteries to direct sunlight or leave in a hot environment (inside an automobile in hot weather) for extended periods of time.
- When the battery is empty, recharge it immediately. Do not store an empty battery, the battery will continue to discharge, it will fall below the

minimum voltage and become unusable.

- Then recycle the battery according to the instructions of your country/region. Never dispose of a LIPO battery with domestic waste.