3.7V Lithium Polymer Battery Data Sheet

Model: 354543

Please Find More:

https://www.fpbattery.com/3-7v-650mah-lithium-polymer-battery/

File Number: A/FP4543-1186

File Version: 01

CONTACT

CUSTOMER SERVICE
86.755.3682.7358
sales@fpbattery.com
Hours of Operation:
9:00am-6:00pm CST, Monday to Friday

LEARN MORE ON:
https://www.fpbattery.com/

DNK POWER COMPANY LIMITED

BATTERY SPECIFICATION

Part Number	DNK 354543
Nominal Voltage	3.7 V
Nominal Capacity	675 mAh
Internal Impedence	<60mΩ
Charge Voltage	4.2V
Recommended Charge Current	0.2 C
Allowed Max Charge Current	0.5 C
Output Voltage Range	4.2 - 2.5 V
Recommended Discharge Current	0.2 C
Max Continuous Discharge Current	1 C
Pulse Discharge Current	3 C (10 mS)
Discharge Cut-off Voltage	2.5± 0.05V
Cycle Life to 80% Health	500 (0.2C, 25°C)

1

1 YEAR WARRANTY

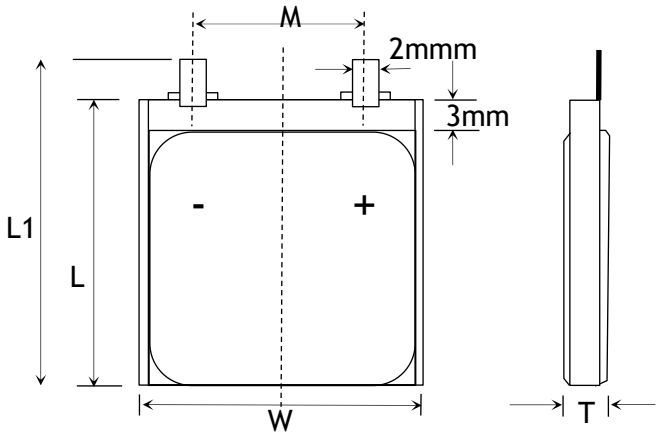

Item	Parameter (mm)
T	3
W	45
M	10
L	43
L_1	45
BL	45 ± 1
CL	100

ENVIRONMENTAL SPECIFICATIONS

Charging Temperature Range	0 - 45°C
Discharging Temperature Range	-20 - 60°C
Storage Period 1 Week	-20 - 45°C
Storage Period 1 Month	-10 - 45°C
Storage Period 6 Months	0 - 35°C

BATTERY PROTECTION

Over Charge	4.275 ± 50mV
Over Discharge	2.5V ± 50mV
Over Current	3A to 5A
Short Circuit	Yes

MECHANICAL SPECIFICATIONS

Dimensions	45x 45 x 3 mm(L*W*T)
Weight	Around 11 g
Battery Terminals	WC/ FL *

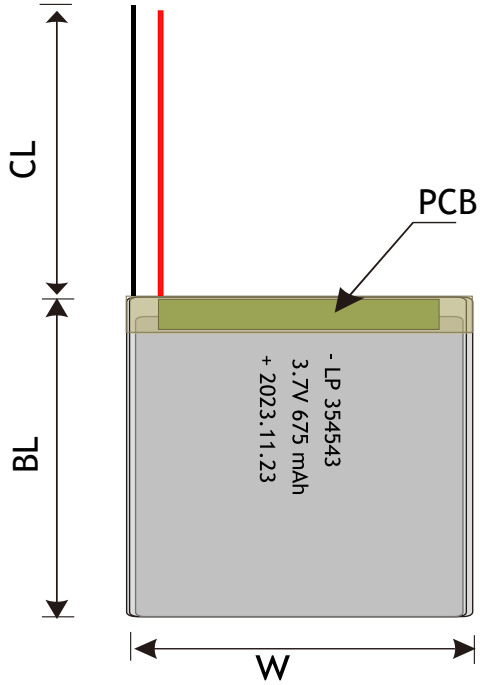

CERTIFICATION

Certification Approval	PLEASE CONSULT SALES

* WC=With Connector FL=Flying Leads UWP=Blue Wrapped PVC
BWP=Black Wrapped PVC BC= Bare Cell

BULK PRODUCTION ACTUAL PICTURES



BARE CELL (BC)



FLYING LEADS (FL)



WITH CONNECTOR (WC)



BLUE WRAPPED PVC (UWP)



BLACK WRAPPED PVC (BWP)

3.7V LIPO BATTERY OPTIONS



Special Ingredients to make batteries work from -40 -85 ° C



Discharging Current up to 100C



Popular JST,Molex,Hirose,Anderson available



LED Power Indicator



Power Button



Upgrade to LifePo4 tech and life circle up to 1500

RELATIVE CURVES

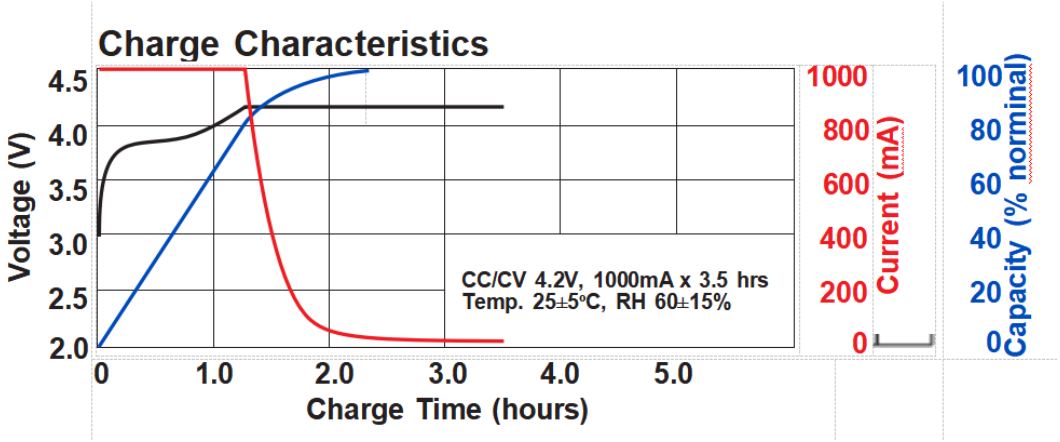

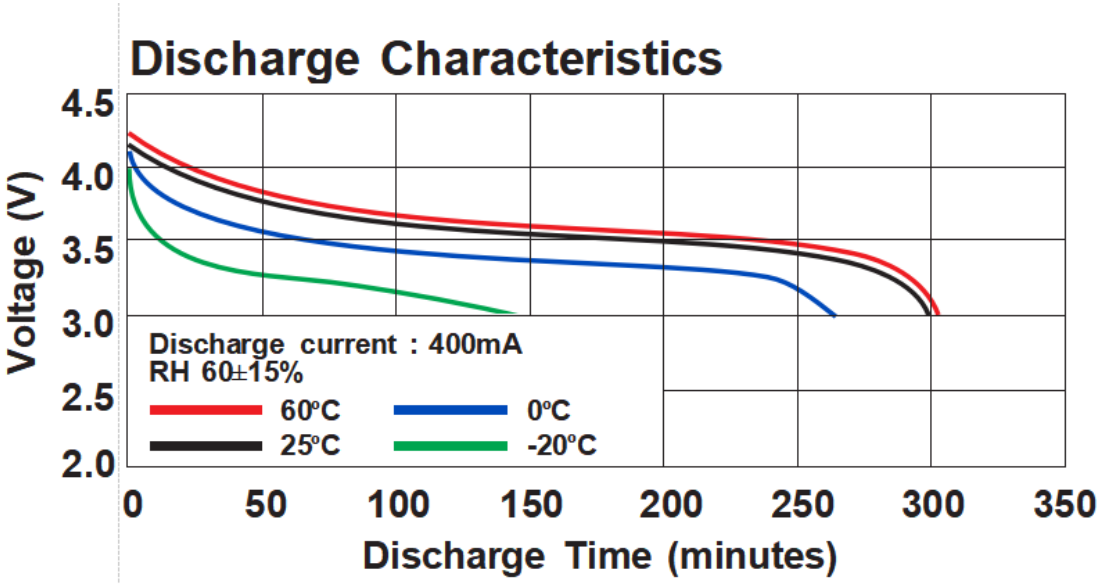

ANNOUNCEMENT

- Avoid changing the battery frequently during use.
- Heat kills Lipos, the hotter a battery gets, the shorter the lifespan will be.
- Avoid using worn and aged batteries.
- Use recommended methods to make battery terminal connections.
- ALWAYS store batteries away from any materials that can catch fire.
- When using the charger, please monitor the temperature of the charger.
- If safe to do so, fully discharge batteries that are to be disposed of.
- Do not charge LiPo batteries in a vehicle or in the engine compartment of a vehicle.
- Set up dedicated charging area. Area must be free of combustible materials. Maintain space between charging batteries.
- Intact batteries can be disposed of as Universal Waste. If the battery is greater than 9V, tape the terminals before disposal.
- Store LiPo batteries to be disposed of in a dedicated area of the battery storage cabinet or a dedicated area of the lab away from combustible materials.