# 3.7V Lithium Polymer Battery Data Sheet

Model:  354337

Please Find More:

https://www.fpbattery.com/3-7v-500mah-lithium-polymer-battery/

File Number:  A/FP4337-516

File Version: 01


CONTACT

CUSTOMER SERVICE
86.755.3682.7358
sales@fpbattery.com
Hours of Operation:
9:00am-6:00pm CST, Monday to Friday

LEARN MORE ON:
https://www.fpbattery.com/

DNK POWER COMPANY LIMITED

## BATTERY SPECIFICATION

| | |
|---|---|
| Part Number | DNK 354337 |
| Nominal Voltage | 3.7 V |
| Nominal Capacity | 555 mAh |
| Internal Impedence | <60mΩ |
| Charge Voltage | 4.2V |
| Recommended Charge Current | 0.2 C |
| Allowed Max Charge Current | 0.5 C |
| Output Voltage Range | 4.2 - 2.5 V |
| Recommended Discharge Current | 0.2 C |
| Max Continuous Discharge Current | 1 C |
| Pulse Discharge Current | 3 C (10 mS) |
| Discharge Cut-off Voltage | 2.5± 0.05V |
| Cycle Life to 80% Health | 500 (0.2C, 25°C) |

1

**1 YEAR WARRANTY**

Inflex and soler

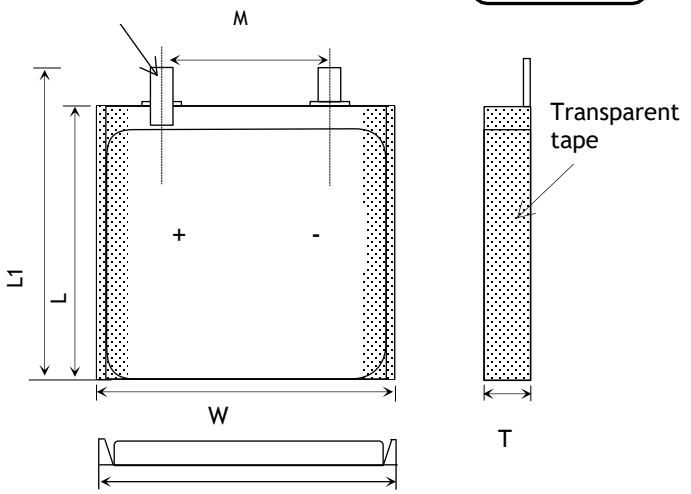


| Item | Parameter (mm) |
|---|---|
| T | 3 |
| W | 43 |
| M | 10 |
| L | 37 |
| $L_1$ | 39 |
| BL | 39 ± 1 |
| CL | 100 |

## ENVIRONMENTAL SPECIFICATIONS

| | |
|---|---|
| Charging Temperature Range | 0 - 45°C |
| Discharging Temperature Range | -20 - 60°C |
| Storage Period 1 Week | -20 - 45°C |
| Storage Period 1 Month | -10 - 45°C |
| Storage Period 6 Months | 0 - 35°C |

## BATTERY PROTECTION

| | |
|---|---|
| Over Charge | 4.275 ± 50mV |
| Over Discharge | 2.5V ± 50mV |
| Over Current | 3A to 5A |
| Short Circuit | Yes |

## MECHANICAL SPECIFICATIONS

| | |
|---|---|
| Dimensions | 39x 43 x 3 mm(L*W*T) |
| Weight | Around 9 g |
| Battery Terminals | WC/ FL * |

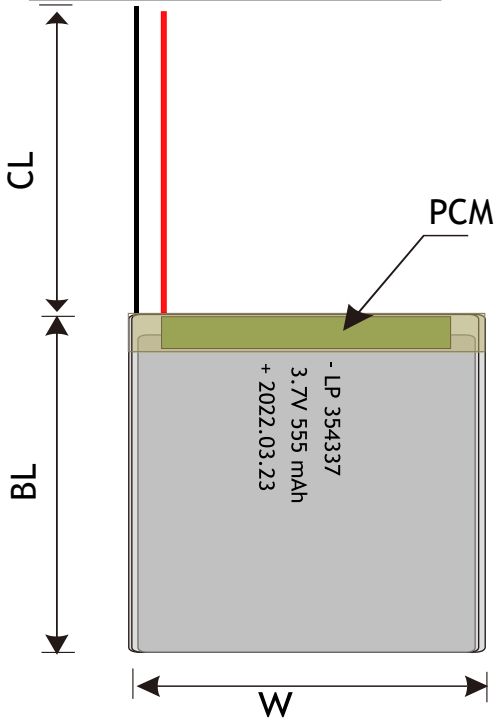


## CERTIFICATION

| | |
|---|---|
| Certification Approval | PLEASE CONSULT SALES |

* WC=With Connector FL=Flying Leads UWP=Blue Wrapped PVC BWP=Black Wrapped PVC BC= Bare Cell

# RELATIVE CURVES

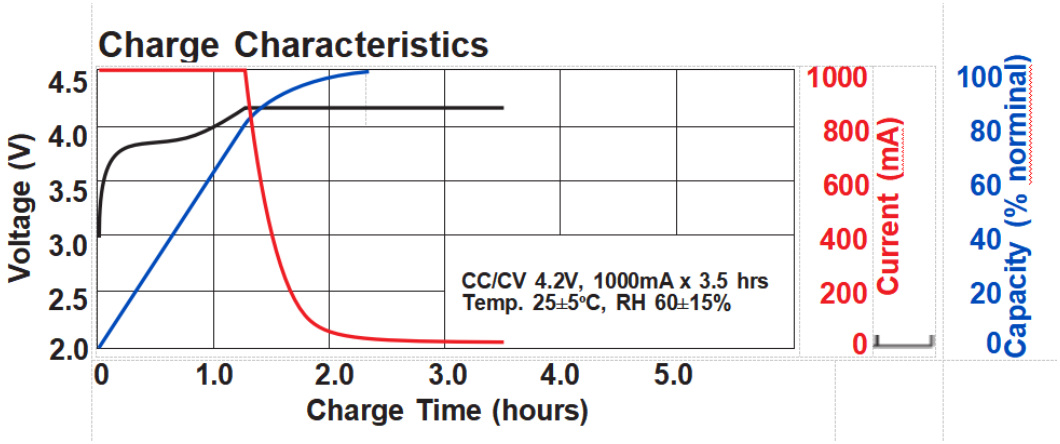


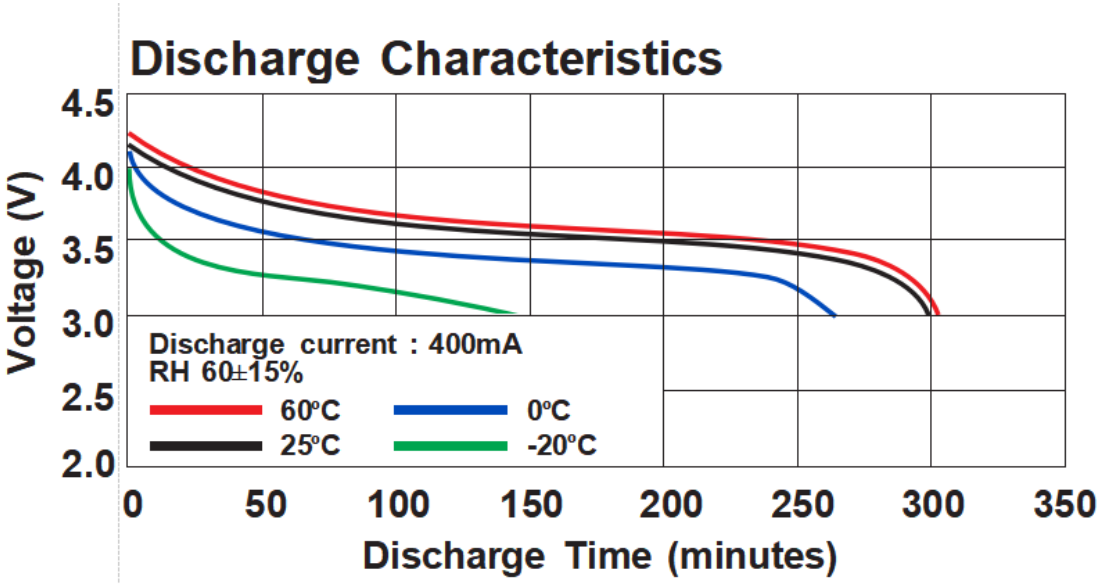


# ANNOUNCEMENT

- Do not short-circuit the battery.
- Never disassemble, modify, puncture, mechanically shock, or short circuit the battery. Leakage, smoke emission, ignition, explosion, or fire, which may result in personal injury and property damage, can occur.
- Never charge a LiPo battery while inside your model.
- Make sure the battery is fully charged before use.
- NEVER use extension cords, power strips, or multi-plugs while charging Li-Ion and LiPo batteries or equipment. Plug the charging cord directly into a wall electrical outlet. Note: only charge one battery or device at a time per outlet.
- Do not reverse the polarity.
- ALWAYS store batteries and devices at room temperature.
- Always guard against any possible short circuit.
- Read and understand the battery's instruction manual carefully before use.
- Slow down the charging and discharging rate of the battery in low temperature environment.
- Do not place the battery on flammable materials near a fire source.