# 3.7V Lithium Polymer Battery Data Sheet

Model: 307575

Please Find More:

https://www.fpbattery.com/3-7v-1700mah-lithium-polymer-battery/

File Number: A/FP7575-1872

File Version: 01


CONTACT

CUSTOMER SERVICE
86.755.3682.7358
sales@fpbattery.com
Hours of Operation:
9:00am-6:00pm CST, Monday to Friday

LEARN MORE ON:
https://www.fpbattery.com/

DNK POWER COMPANY LIMITED

## BATTERY SPECIFICATION

| | |
|---|---|
| Part Number | DNK 307575 |
| Nominal Voltage | 3.7 V |
| Nominal Capacity | 1700 mAh |
| Internal Impedence | <60mΩ |
| Charge Voltage | 4.2V |
| Recommended Charge Current | 0.2 C |
| Allowed Max Charge Current | 0.5 C |
| Output Voltage Range | 4.2 - 2.5 V |
| Recommended Discharge Current | 0.2 C |
| Max Continuous Discharge Current | 1 C |
| Pulse Discharge Current | 3 C (10 mS) |
| Discharge Cut-off Voltage | 2.5± 0.05V |
| Cycle Life to 80% Health | 500 (0.2C, 25°C) |

1

**1 YEAR WARRANTY**

Inflex and soler

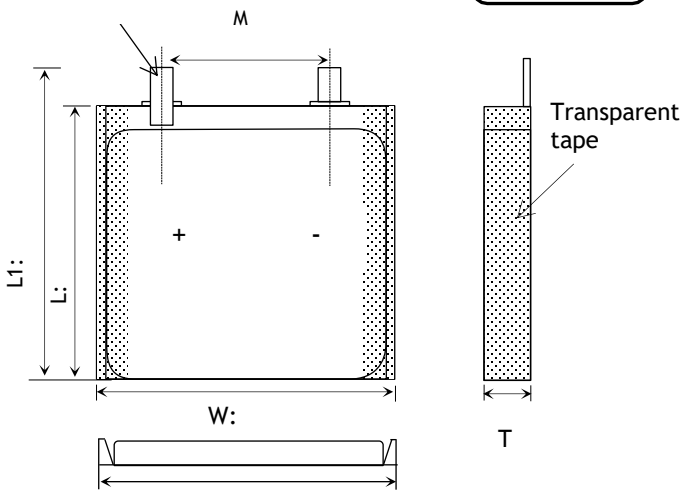


| Item | Parameter (mm) |
|---|---|
| T | 3 |
| W | 75 |
| M | 10 |
| L | 75 |
| $L_1$ | 77 |
| BL | 77 ± 1 |
| CL | 100 |

## ENVIRONMENTAL SPECIFICATIONS

| | |
|---|---|
| Charging Temperature Range | 0 - 45°C |
| Discharging Temperature Range | -20 - 60°C |
| Storage Period 1 Week | -20 - 45°C |
| Storage Period 1 Month | -10 - 45°C |
| Storage Period 6 Months | 0 - 35°C |

## BATTERY PROTECTION

| | |
|---|---|
| Over Charge | 4.275 ± 50mV |
| Over Discharge | 2.5V ± 50mV |
| Over Current | 3A to 5A |
| Short Circuit | Yes |

## MECHANICAL SPECIFICATIONS

| | |
|---|---|
| Dimensions | 77x 75 x 3 mm(L*W*T) |
| Weight | Around 28 g |
| Battery Terminals | WC/ FL * |

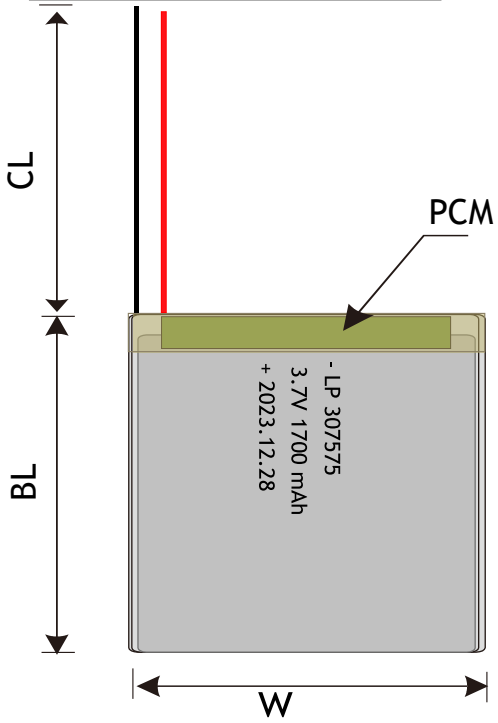


## CERTIFICATION

| | |
|---|---|
| Certification Approval | PLEASE CONSULT SALES |

* WC=With Connector FL=Flying Leads UWP=Blue Wrapped PVC BWP=Black Wrapped PVC BC= Bare Cell

# RELATIVE CURVES

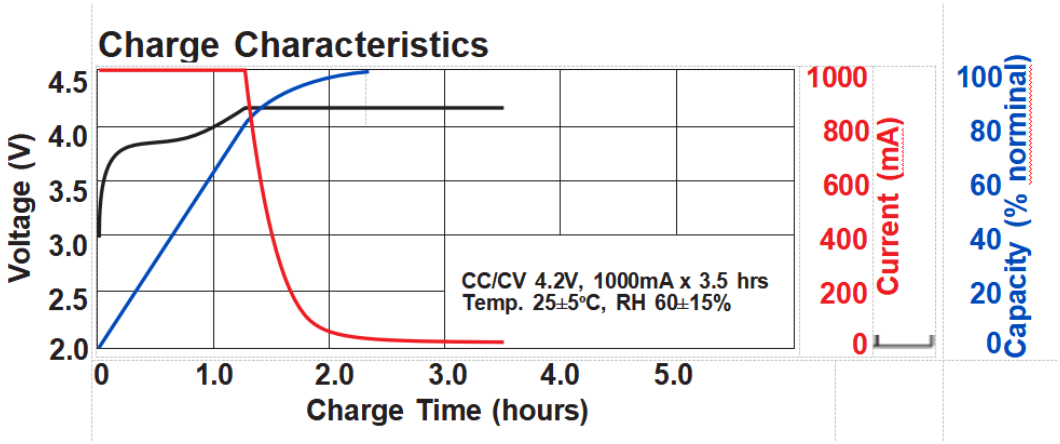


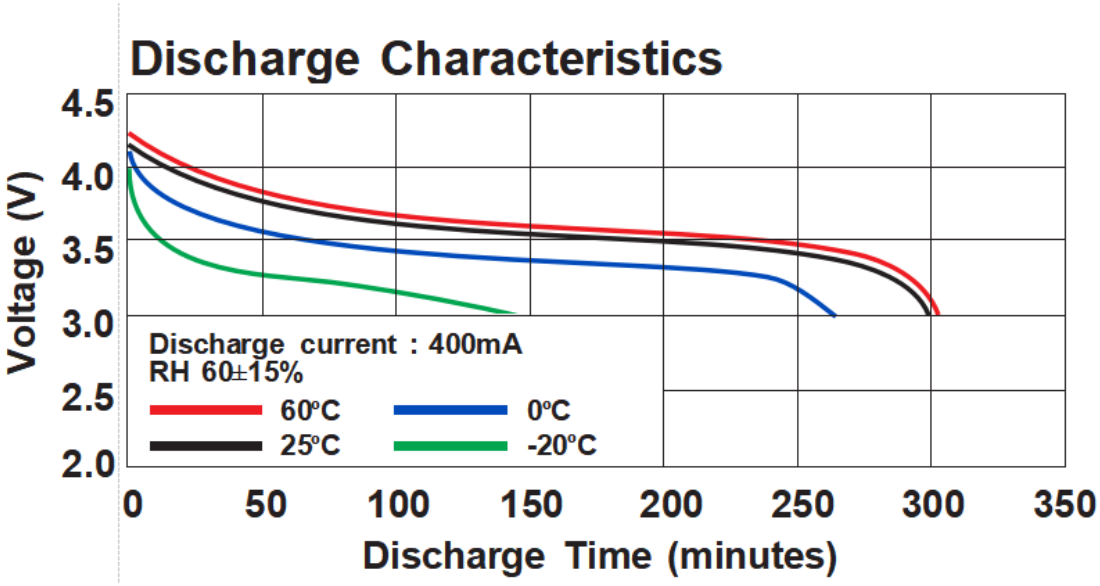


# ANNOUNCEMENT

- Do not allow a Lipo battery to get wet
- Do not charge any pack containing one or more damaged or swollen/puffed cell as there is a high risk of a fire. Dispose of them.
- Avoid restarting the device frequently on the way to using the battery.
- Never discharge Batteries at amperage rates higher than specified on Batteries' labels
- Do not allow the battery to be fully discharged and recharge it promptly to prolong battery life.
- Do not expose the battery to temperature extremes, such as high or low temperatures.
- ALWAYS evacuate the room or space and notify others to evacuate.
- ALWAYS download a copy of the Safety Data Sheet (SDS) for the battery on the manufacturer's website or by contacting the manufacturer. Review and understand the hazards of the battery before storing, charging, or using.
- Do not allow the battery to come into common contact with metal to prevent a short circuit.
- Do not place the battery near flammable materials.
- A 5s4p battery pack means that the pack contains 5 cells in a series circuit and 4 cells in a parallel circuit. Since each cell is 3.7v (nominal) a 5s LiPo battery has a nominal voltage of 18.5V, a fully charged voltage of 21.0V and a maximum discharged voltage of 15.0V before damage occurs.