3.7V Lithium Polymer Battery Data Sheet

Model: 307063

Please Find More:

https://www.fpbattery.com/3-7v-1300mah-lithium-polymer-battery/

File Number: A/FP7063-661

File Version: 01

CONTACT

CUSTOMER SERVICE
86.755.3682.7358
sales@fpbattery.com
Hours of Operation:
9:00am-6:00pm CST, Monday to Friday

LEARN MORE ON:
https://www.fpbattery.com/

DNK POWER COMPANY LIMITED

BATTERY SPECIFICATION

Part Number	DNK 307063
Nominal Voltage	3.7 V
Nominal Capacity	1300 mAh
Internal Impedence	<60mΩ
Charge Voltage	4.2V
Recommended Charge Current	0.2 C
Allowed Max Charge Current	0.5 C
Output Voltage Range	4.2 - 2.5 V
Recommended Discharge Current	0.2 C
Max Continuous Discharge Current	1 C
Pulse Discharge Current	3 C (10 mS)
Discharge Cut-off Voltage	2.5± 0.05V
Cycle Life to 80% Health	500 (0.2C, 25°C)

1

1 YEAR WARRANTY

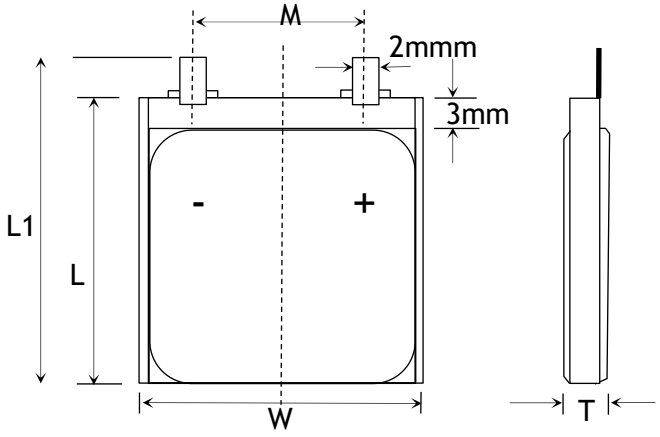

Item	Parameter (mm)
T	3
W	70
M	10
L	63
L_1	65
BL	65 ± 1
CL	100

ENVIRONMENTAL SPECIFICATIONS

Charging Temperature Range	0 - 45°C
Discharging Temperature Range	-20 - 60°C
Storage Period 1 Week	-20 - 45°C
Storage Period 1 Month	-10 - 45°C
Storage Period 6 Months	0 - 35°C

BATTERY PROTECTION

Over Charge	4.275 ± 50mV
Over Discharge	2.5V ± 50mV
Over Current	3A to 5A
Short Circuit	Yes

MECHANICAL SPECIFICATIONS

Dimensions	65x 70 x 3 mm(L*W*T)
Weight	Around 21 g
Battery Terminals	WC/ FL *

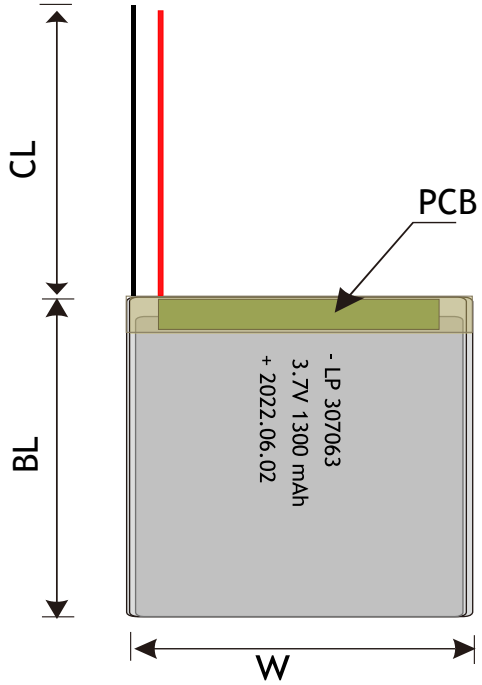

CERTIFICATION

Certification Approval	PLEASE CONSULT SALES

* WC=With Connector FL=Flying Leads UWP=Blue Wrapped PVC
BWP=Black Wrapped PVC BC= Bare Cell

BULK PRODUCTION ACTUAL PICTURES



BARE CELL (BC)



FLYING LEADS (FL)



WITH CONNECTOR (WC)



BLUE WRAPPED PVC (UWP)



BLACK WRAPPED PVC (BWP)

3.7V LIPO BATTERY OPTIONS



Special Ingredients to make batteries work from -40 -85 ° C



Discharging Current up to 100C



Popular JST,Molex,Hirose,Anderson available



LED Power Indicator



Power Button



Upgrade to LifePo4 tech and life circle up to 1500

RELATIVE CURVES

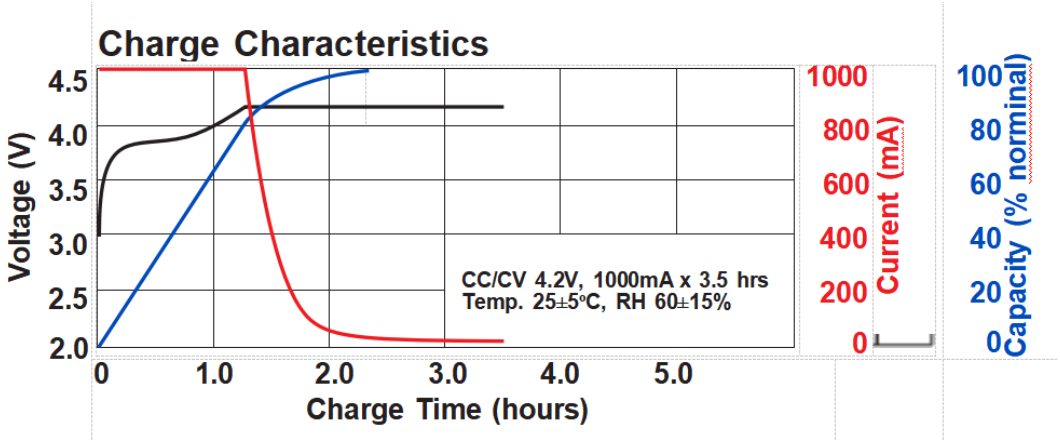

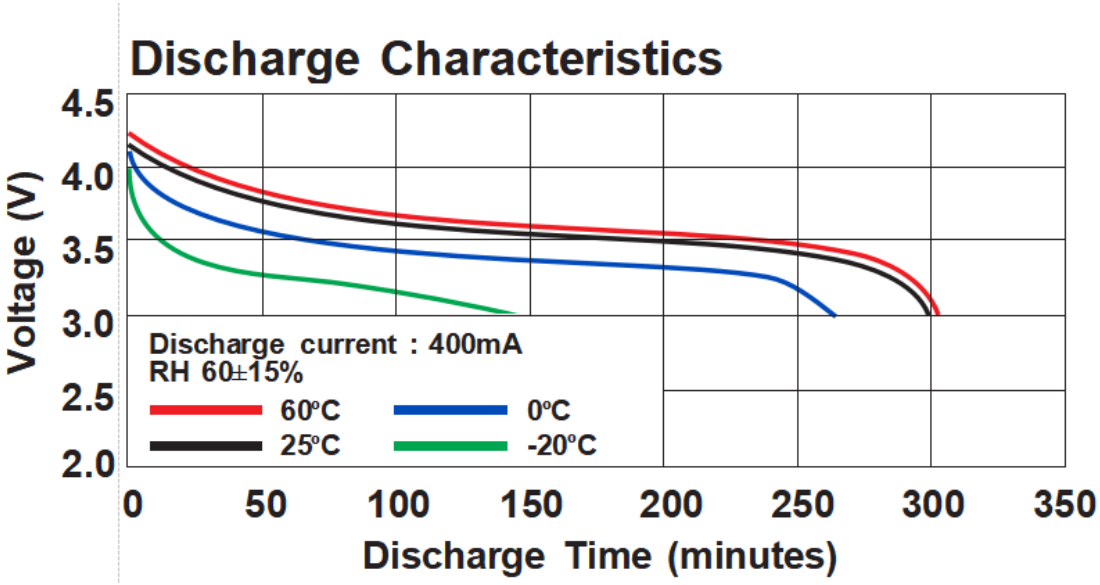

ANNOUNCEMENT

- Do not store your cells in a hot place (i.e. in your car on a hot day) as this may cause them to catch fire or even explode.
- Maintain the minimum quantity of batteries possible.
- Do not vibrate the battery excessively.
- Never store or charge the battery inside your car or in extreme temperatures. Extreme temperatures might ignite the battery and cause fire. 7) Store the battery in a location inaccessible to children. Be sure that children do not remove the battery from the charger or model.
- Store LiPo batteries at room temperature between 5°C and 27°C (40°F and 80°F) for best results. The lower the temperature the better.
- Immediately disconnect the batteries if, during operation or charging, they emit an unusual smell, develop heat, change shape/geometry, or behave abnormally.
- Store Li-Ion batteries and devices in dry, cool locations and in fire-resistant containers.
- Never drop this type of battery, it will be deformed and we advise you never to try to charge a deformed battery as this may cause swelling, leakage and even fire.
- If charging indoors, only charge with a smoke detector above where you are charging.
- Misuse of a Lipo battery may result in the battery generating excessive heat, igniting or exploding. Keep batteries out of the reach of children.
- Do not charge LiPo batteries in the model as you can not successfully monitor and move them quickly if necessary.