3.7V Lithium Polymer Battery Data Sheet

Model: 306667

Please Find More:

https://www.fpbattery.com/3-7v-1300mah-lithium-polymer-battery/

File Number: A/FP6667-2420

File Version: 01

CONTACT

CUSTOMER SERVICE
86.755.3682.7358
sales@fpbattery.com
Hours of Operation:
9:00am-6:00pm CST, Monday to Friday

LEARN MORE ON:
https://www.fpbattery.com/

DNK POWER COMPANY LIMITED

BATTERY SPECIFICATION

Part Number	DNK 306667
Nominal Voltage	3.7 V
Nominal Capacity	1300 mAh
Internal Impedence	<60mΩ
Charge Voltage	4.2V
Recommended Charge Current	0.2 C
Allowed Max Charge Current	0.5 C
Output Voltage Range	4.2 - 2.5 V
Recommended Discharge Current	0.2 C
Max Continuous Discharge Current	1 C
Pulse Discharge Current	3 C (10 mS)
Discharge Cut-off Voltage	2.5± 0.05V
Cycle Life to 80% Health	500 (0.2C, 25°C)

1

1 YEAR WARRANTY

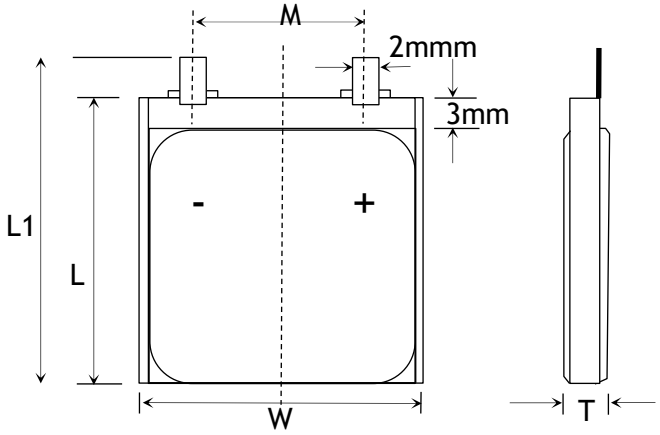

Item	Parameter (mm)
T	3
W	66
M	10
L	67
L_1	69
BL	69 ± 1
CL	100

ENVIRONMENTAL SPECIFICATIONS

Charging Temperature Range	0 - 45°C
Discharging Temperature Range	-20 - 60°C
Storage Period 1 Week	-20 - 45°C
Storage Period 1 Month	-10 - 45°C
Storage Period 6 Months	0 - 35°C

BATTERY PROTECTION

Over Charge	4.275 ± 50mV
Over Discharge	2.5V ± 50mV
Over Current	3A to 5A
Short Circuit	Yes

MECHANICAL SPECIFICATIONS

Dimensions	69x 66 x 3 mm(L*W*T)
Weight	Around 21 g
Battery Terminals	WC/ FL *

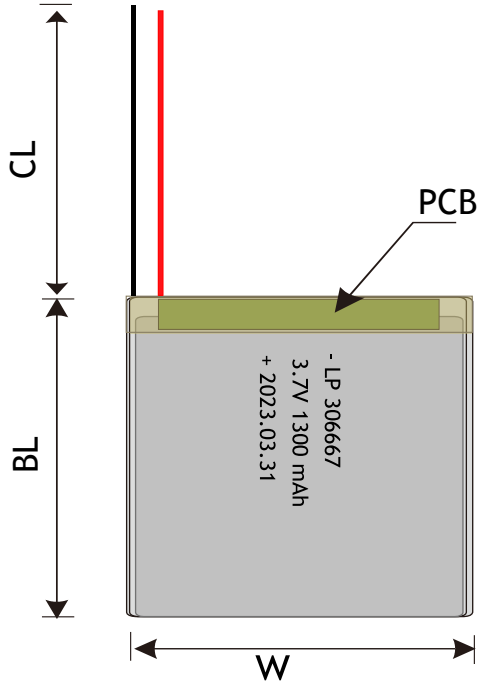

CERTIFICATION

Certification Approval	PLEASE CONSULT SALES

* WC=With Connector FL=Flying Leads UWP=Blue Wrapped PVC
BWP=Black Wrapped PVC BC= Bare Cell

RELATIVE CURVES

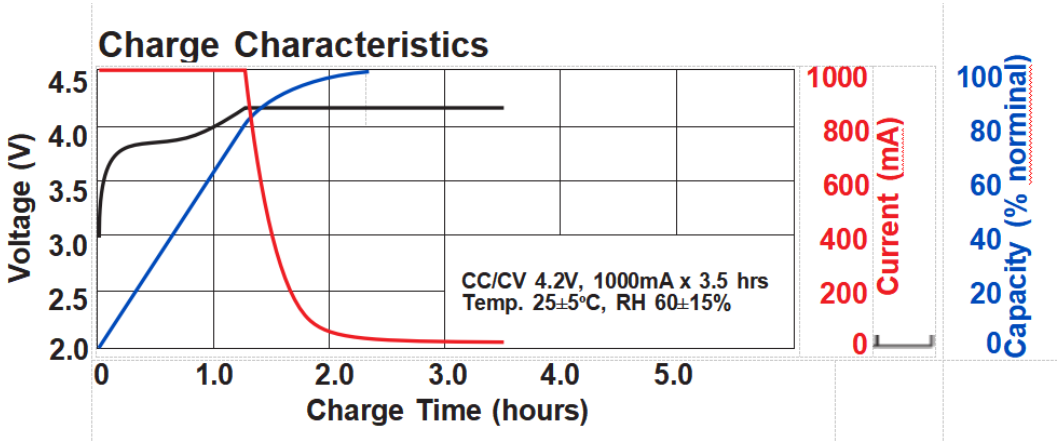

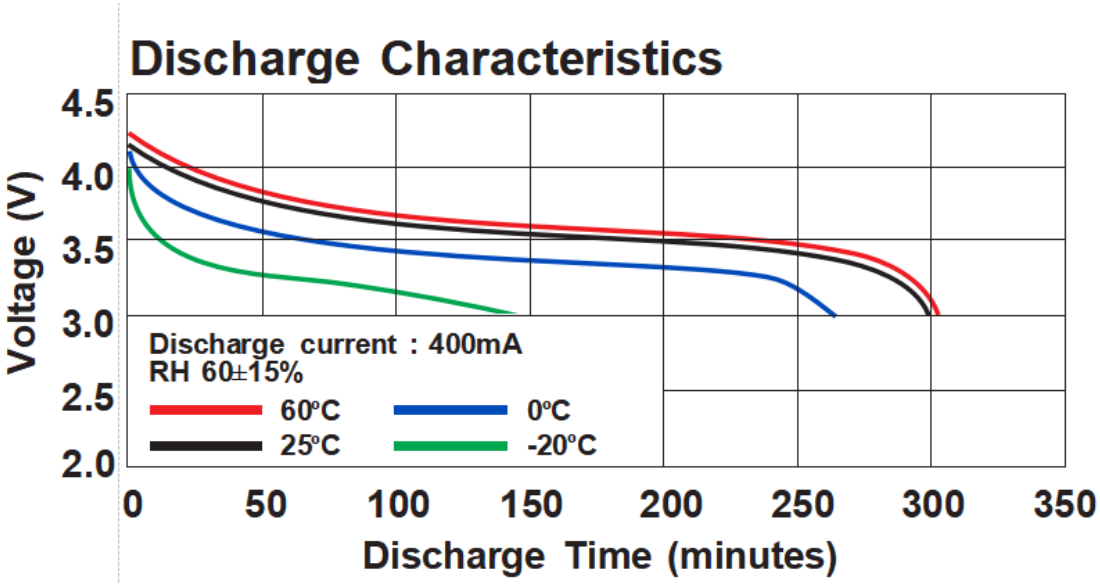

ANNOUNCEMENT

- Make sure the device is turned off before disconnecting the power.
- NEVER leave your LiPo battery unattended while charging.
- Insulate all battery terminals on batteries to be disposed of.
- When the battery is empty, recharge it immediately. Do not store an empty battery, the battery will continue to discharge, it will fall below the minimum voltage and become unusable.
- Observe the polarities (Negative and Positive). Do not connect them wrongly.
- Use a dedicated lithium polymer battery charger and ensure that it meets the charging requirements of the battery.
- The cells shall never be soaked with liquids such as water, seawater drinks such as soft drinks, juices coffee or others.
- Only use chargers provided by and/or approved by the manufacturer.
- If you start seeing any physical changes to the battery while discharging example puffing, STOP charging immediately and dispose of the battery responsibly.
- ALWAYS tape over the terminals/contacts of each battery (a fire can start if battery terminals come into contact with each other or other metallic items in the area).
- Do not put batteries in contact with conductive materials, water, seawater, strong oxidizers