3.7V Lithium Polymer Battery Data Sheet

Model: 305050

Please Find More:

https://www.fpbattery.com/3-7v-750mah-lithium-polymer-battery/

File Number: A/FP5050-2002

File Version: 01

CONTACT

CUSTOMER SERVICE
86.755.3682.7358
sales@fpbattery.com
Hours of Operation:
9:00am-6:00pm CST, Monday to Friday

LEARN MORE ON:
https://www.fpbattery.com/

DNK POWER COMPANY LIMITED

BATTERY SPECIFICATION

Part Number	DNK 305050
Nominal Voltage	3.7 V
Nominal Capacity	750 mAh
Internal Impedence	<60mΩ
Charge Voltage	4.2V
Recommended Charge Current	0.2 C
Allowed Max Charge Current	0.5 C
Output Voltage Range	4.2 - 2.5 V
Recommended Discharge Current	0.2 C
Max Continuous Discharge Current	1 C
Pulse Discharge Current	3 C (10 mS)
Discharge Cut-off Voltage	2.5± 0.05V
Cycle Life to 80% Health	500 (0.2C, 25°C)

1

1 YEAR WARRANTY

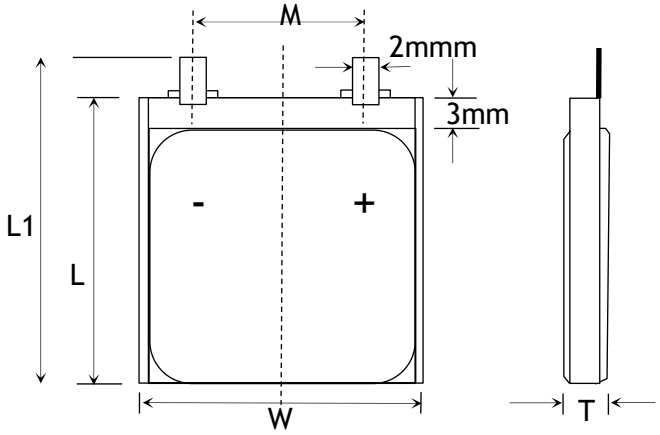

Item	Parameter (mm)
T	3
W	50
M	10
L	50
L_1	52
BL	52 ± 1
CL	100

ENVIRONMENTAL SPECIFICATIONS

Charging Temperature Range	0 - 45°C
Discharging Temperature Range	-20 - 60°C
Storage Period 1 Week	-20 - 45°C
Storage Period 1 Month	-10 - 45°C
Storage Period 6 Months	0 - 35°C

BATTERY PROTECTION

Over Charge	4.275 ± 50mV
Over Discharge	2.5V ± 50mV
Over Current	3A to 5A
Short Circuit	Yes

MECHANICAL SPECIFICATIONS

Dimensions	52x 50 x 3 mm(L*W*T)
Weight	Around 12 g
Battery Terminals	WC/ FL *

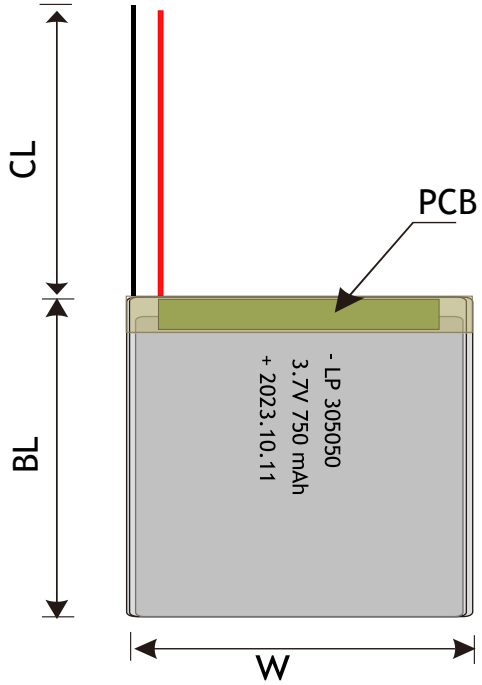

CERTIFICATION

Certification Approval	PLEASE CONSULT SALES

* WC=With Connector FL=Flying Leads UWP=Blue Wrapped PVC
BWP=Black Wrapped PVC BC= Bare Cell

RELATIVE CURVES

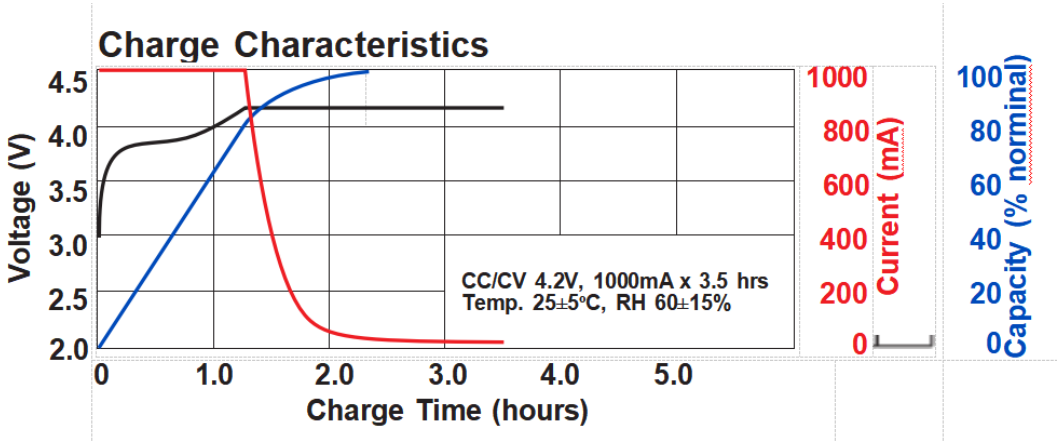

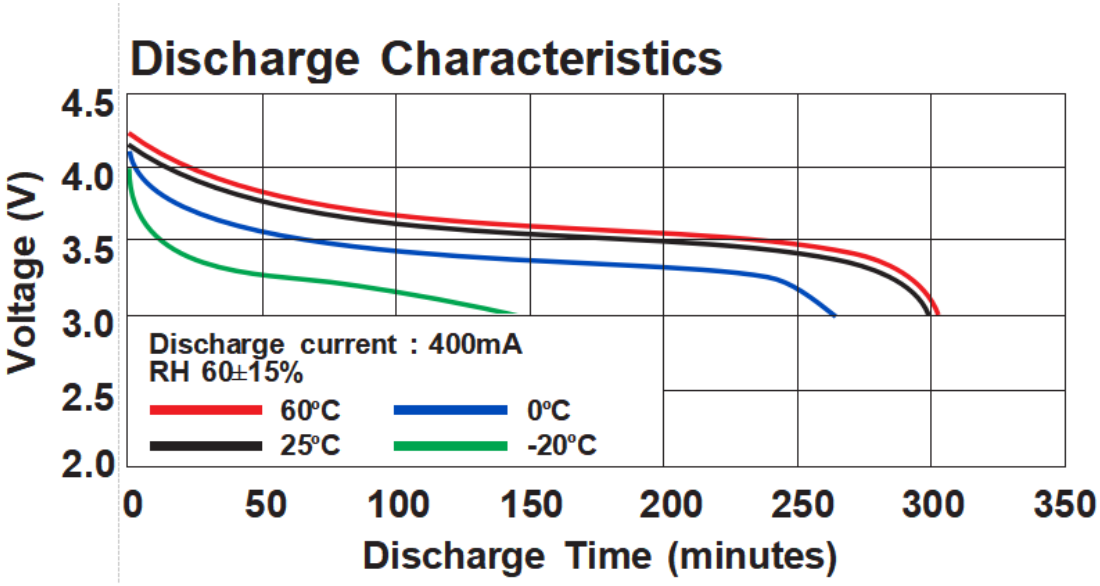

ANNOUNCEMENT

- Do not vibrate the battery excessively.
- Never put batteries in your pocket or non fireproof bags this may cause the battery to short circuit.
- The batteries must be stored within -10°C~45°C range environmental condition.
- Ensure connectors are insulated correctly to prevent short circuit in handling or storage.
- Check the voltage of the pack or cells before charging. Do not attempt to charge any pack if the open voltage is lower than the Lowest Open Voltage. Check the voltage of each cell before charging via the balance connector. If the voltage of any cell is less than 3.0V/cell, remove it from service, and dispose of it properly.
- ALWAYS store batteries and devices at room temperature.
- Security or other responsible staff on site who may be called to take action in an emergency should be made aware of the location of the charging area, the means for isolating the power and the action to take in an emergency.
- Always use a balancer board to charge LiPo Battery with more than 1 cell.
- When using an adapter, select an output voltage and current that meets the needs of the battery.
- If charging indoors, only charge with a smoke detector above where you are charging.
- The battery must be protected from physical contact with any other part of the model.