Lithium Polymer (Li-Po) Battery Data-sheet

Features of Battery

- Accurate Battery Size & Weight & Safe
- Massive Range of Li-Po Battery Current
- Cost Effective for Your Device
- Excellent Charge & Discharge Characteristics

Environmental and Safety

Please follow Li-Po Handling and Safety Precautions. This battery meets the requirements of Battery Directives, and the battery parts are IEC62133 and ROHS - Compliant. For more safety precautions and performance standards, please go to https://www.fpbattery.com

Li-Polymer Battery Dimension

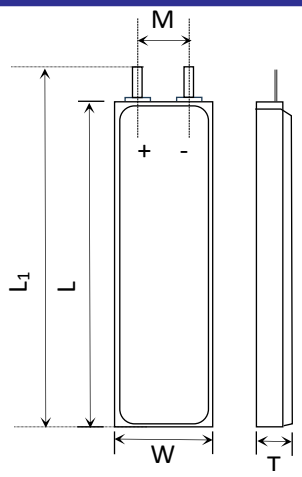

Item	Parameter (mm)
T	5.0
W	13
M	6/8
L	50
L_1	52
BL	52 ± 1
CL	100

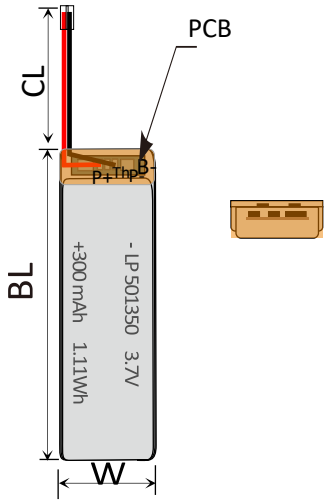

Specification

Electrical Data	Part Number	LP501350
	Nominal Voltage	3.7V
	Nominal Capacity	300 mAh
	Internal Impedance	< 60mΩ
	Charge Voltage	4.2V
	Recommended Charge Current	0.2C
	Allowed Max Charge Current	0.5C
	Output Voltage Range	4.2 - 2.5V
	Recommend Discharge Current	0.2C
	Max Continuous Discharge Current	1C
	Pulse Discharge Current	3C(10mS)
	Discharge Cut-off Voltage	2.5 ± 0.05V
	Cycle Life to 80% Health	500(0.2C, 25℃)
Environmental Data	Charging Temperature Range	0 - 45℃
	Discharging Temperature Range	-20 - 60℃
	Storage Period 1 Week	-20 - 45℃
	Storage Period 1 Month	-10 - 45℃
	Storage Period 6 Months	0 - 35℃
Battery Protection	Over Charge	4.275 ± 50mV
	Over Discharge	2.5 ± 50mV
	Over Current	3A - 5A
	Short Circuit	Yes
Mechanical Data	Dimension	52×13×5.0 mm
	Weight	≤10 g
	Battery Terminals	WC/FL*

*WC=With Connector FL=Flying Leads

Specifications are subject to change without notice.