# Lithium Polymer (Li-Po) Battery Data-sheet

## Features of Battery

- Accurate Battery Size & Weight & Safe
- Massive Range of Li-Po Battery Current
- Cost Effective for Your Device
- Excellent Charge & Discharge Characteristics

## Environmental and Safety

Please follow Li-Po Handling and Safety Precautions. This battery meets the requirements of Battery Directives, and the battery parts are IEC62133 and ROHS - Compliant. For more safety precautions and performance standards, please go to https://www.fpbattery.com

## Li-Polymer Battery Dimension

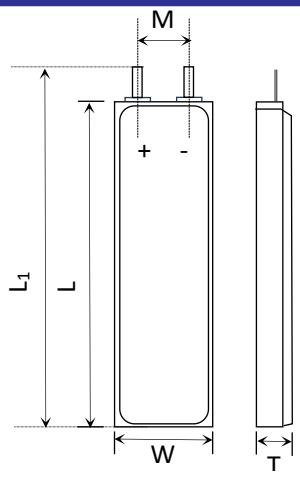


| Item | Parameter (mm) |
|---|---|
| T | 2.3 |
| W | 20 |
| M | 6/8 |
| L | 84 |
| $L_1$ | 86 |
| BL | 86 ± 1 |
| CL | 100 |

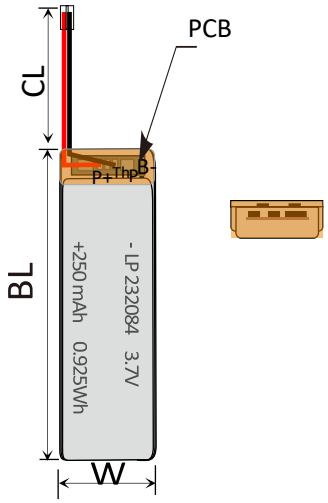


## Specification

| | | |
|---|---|---|
| Electrical Data | Part Number | LP232084 |
| | Nominal Voltage | 3.7V |
| | Nominal Capacity | 250 mAh |
| | Internal Impedance | < 60mΩ |
| | Charge Voltage | 4.2V |
| | Recommended Charge Current | 0.2C |
| | Allowed Max Charge Current | 0.5C |
| | Output Voltage Range | 4.2 - 2.5V |
| | Recommend Discharge Current | 0.2C |
| | Max Continuous Discharge Current | 1C |
| | Pulse Discharge Current | 3C(10mS) |
| | Discharge Cut-off Voltage | 2.5 ± 0.05V |
| | Cycle Life to 80% Health | 500(0.2C, 25℃) |
| Environmental Data | Charging Temperature Range | 0 - 45℃ |
| | Discharging Temperature Range | -20 - 60℃ |
| | Storage Period 1 Week | -20 - 45℃ |
| | Storage Period 1 Month | -10 - 45℃ |
| | Storage Period 6 Months | 0 - 35℃ |
| Battery Protection | Over Charge | 4.275 ± 50mV |
| | Over Discharge | 2.5 ± 50mV |
| | Over Current | 3A - 5A |
| | Short Circuit | Yes |
| Mechanical Data | Dimension | 86×20×2.3 mm |
| | Weight | ≤10 g |
| | Battery Terminals | WC/FL* |

*WC=With Connector FL=Flying Leads

Specifications are subject to change without notice.