Data sheet

LITHIUM POLYMER BATTERY

1 YEAR WARRANTY

PART NUMBER: LP340835

ELECTRICAL CHARACTERISTICS

RATED CAPACITY	75mAh
NOMINAL VOLTAGE	3.7V
WATT-HOUR RATING	0.2775 Wh
MAX. OPERATING VOLTAGE RANGE	2.75V -4.20V
PULSE DISCHARGE CURRENT	3C(1mS)
MAX. CHARGE CURRENT	0.5C
MAX. CONTINOUS DISCHARGE CURRENT	1C
INTERNAL IMPEDANCE	<60m Ω
EXPECTED CYCLE LIFE(23±5℃)	500(0.2C)

MECHANICAL CHARACTERISTICS

DIMENSIONS	37 x 8 x 3.4 mm
PCM	YES
TERMINALS	WC/FL*
WEIGHT	≤2 g

**WC=With Connector FL=Flying Leads*

CELL PROTECTION

OVER CHARGE DEFECTION	4.275±50mV
OVER DISCHARGE DEFECTION	2.5V±50mV
OVER CURRENT DEFECTION	3A-5A
SHORT CIRCUIT DEFECTION	YES

AMBIENT CODITIONS

CHARGE TEMP. RANGE	0~+45℃
DISCHARGE TEMP. RANGE	-20~+60℃
STORAGE TEMP. RANGE	0~+35℃(per year)
HUMIDITY	65±20%RH

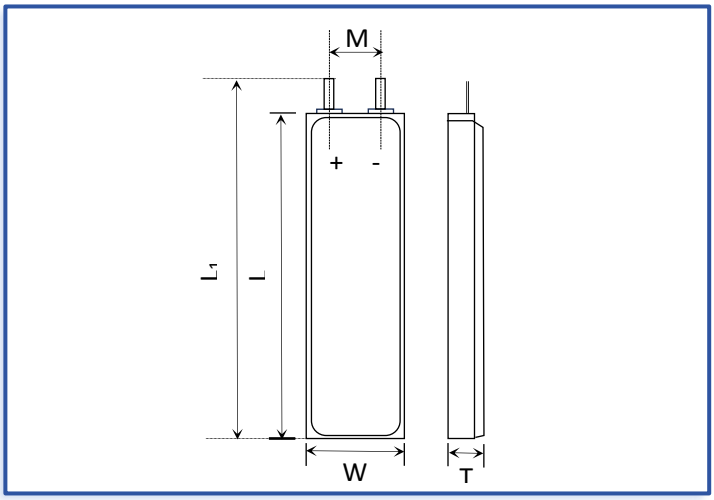

Item	Parameter (mm)
T	3.4
W	8
M	5
L	35
L_1	37
BL	37±1
CL	100

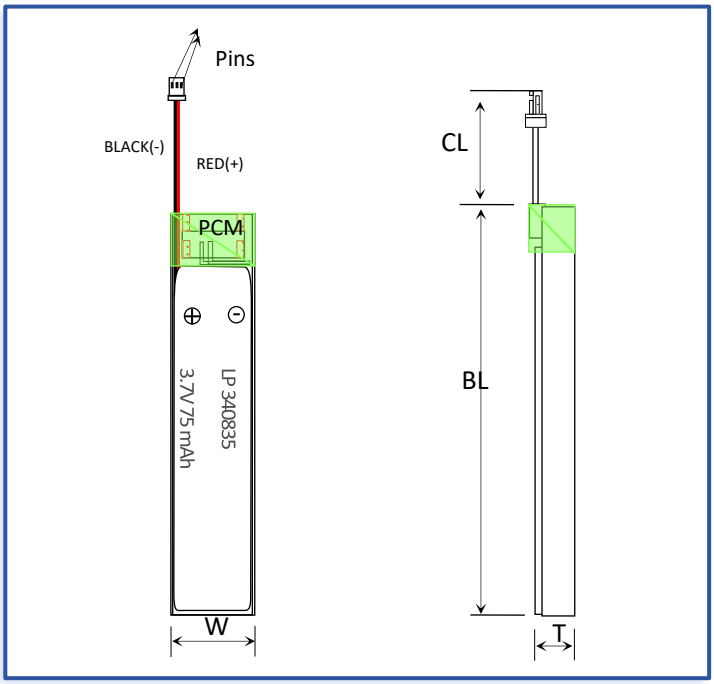

*Specifications are subject to change without notice.

CONTACT

CUSTOMER SERVICE
+86 755 3682 7358
sales@fpbattery.com

LEARN MORE ON:
www.fpbattery.com
LP POWER COMPANY LIMITED