Lithium Polymer (Li-Po) Battery Data-sheet

Features of Li-Po Battery

- Low Self Discharge Rate
- Long Cycle Life
- Light Weight
- More Safety

Environmental and Safety

Please follow Li-Po Handling and Safety Precautions. This battery meets the requirements of Battery Directives, and the battery parts are IEC62133 and ROHS - Compliant. For more safety precautions and performance standards, please go to https://www.fpbattery.com

Li-Polymer Battery Dimension

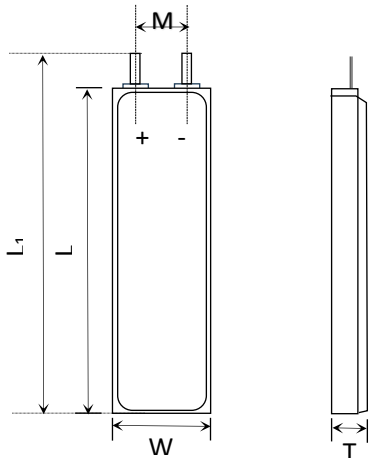

Item	Parameter (mm)
T	3.2
W	15
M	6/8
L	30
L_1	32
BL	32 ± 1
CL	100

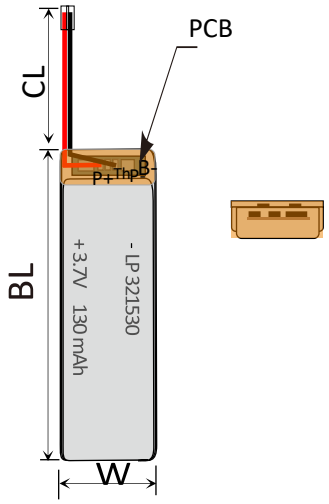

Specification

Electrical Data	Part Number	LP321530
	Nominal Voltage	3.7V
	Nominal Capacity	130 mAh
	Internal Impedance	< 60mΩ
	Charge Voltage	4.2V
	Recommended Charge Current	26mA/0.2C
	Allowed Max Charge Current	65mA/0.5C
	Output Voltage Range	4.2 - 2.5V
	Recommend Discharge Current	26mA/0.2C
	Max Continuous Discharge Current	130mA/1C
	Pulse Discharge Current	390mA/3C
	Discharge Cut-off Voltage	2.5 ± 0.05V
	Cycle Life to 80% Health	500(0.2C, 25℃)
Environmental Data	Charging Temperature Range	0 - 45℃
	Discharging Temperature Range	-20 - 60℃
	Storage Period 1 Week	-20 - 45℃
	Storage Period 1 Month	-10 - 45℃
	Storage Period 6 Months	0 - 35℃
Battery Protection	Over Charge	4.275 ± 50mV
	Over Discharge	2.5 ± 50mV
	Over Current	3A - 5A
	Short Circuit	Yes
Mechanical Data	Dimension	32×15×3.2 mm
	Weight	≤5 g
	Battery Terminals	WC/FL*

*WC=With Connector FL=Flying Leads

Specifications are subject to change without notice.