Data sheet

LITHIUM POLYMER BATTERY

1 YEAR WARRANTY

PART NUMBER: LP301140

ELECTRICAL CHARACTERISTICS

RATED CAPACITY	90mAh
NOMINAL VOLTAGE	3.7V
WATT-HOUR RATING	0.333 Wh
MAX. OPERATING VOLTAGE RANGE	2.75V -4.20V
PULSE DISCHARGE CURRENT	3C(1mS)
MAX. CHARGE CURRENT	0.5C
MAX. CONTINOUS DISCHARGE CURRENT	1C
INTERNAL IMPEDANCE	<60m Ω
EXPECTED CYCLE LIFE(23±5℃)	500(0.2C)

MECHANICAL CHARACTERISTICS

DIMENSIONS	42 x 11 x 3.0 mm
PCM	YES
TERMINALS	WC/FL*
WEIGHT	≤2 g

*WC=With Connector FL=Flying Leads

CELL PROTECTION

OVER CHARGE DEFECTION	4.275±50mV
OVER DISCHARGE DEFECTION	2.5V±50mV
OVER CURRENT DEFECTION	3A-5A
SHORT CIRCUIT DEFECTION	YES

AMBIENT CODITIONS

CHARGE TEMP. RANGE	0~+45℃
DISCHARGE TEMP. RANGE	-20~+60℃
STORAGE TEMP. RANGE	0~+35℃(per year)
HUMIDITY	65±20%RH

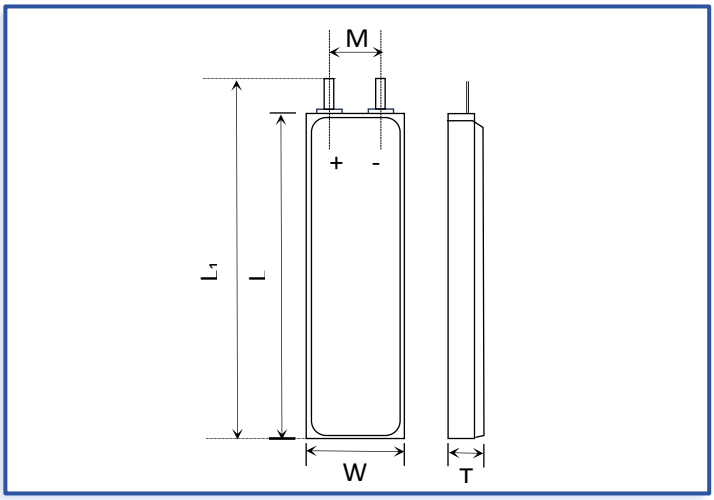

Item	Parameter (mm)
T	3.0
W	11
M	5
L	40
L_1	42
BL	42±1
CL	100

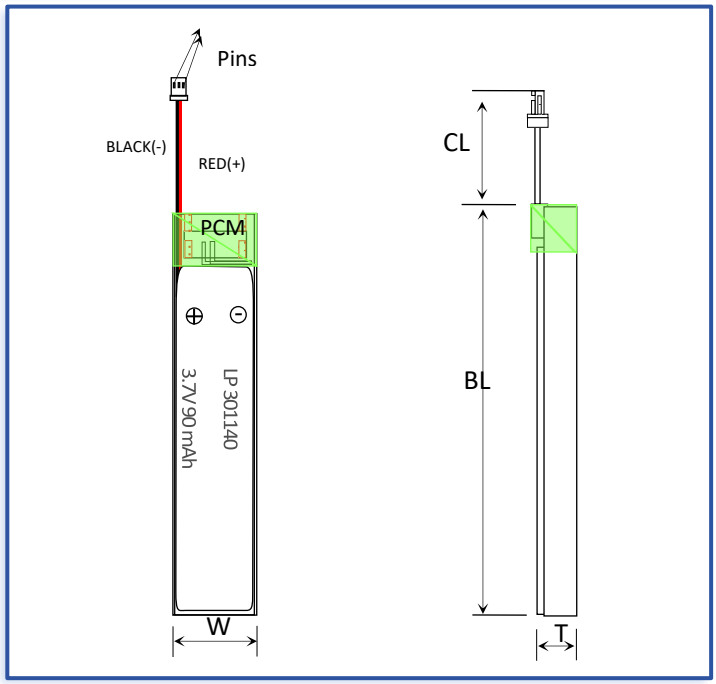

*Specifications are subject to change without notice.

CONTACT
CUSTOMER SERVICE
+86 755 3682 7358
sales@fpbattery.com
LEARN MORE ON:
www.fpbattery.com
LP POWER COMPANY LIMITED